Two-Drawer Dressing Mirror • Tabletop TV Stand • Bookends • Jewelry Box • Working with Brass

Woodsmith®

Vol. 21 / No. 126

Two-Drawer Dressing Mirror

Also:

- Elegant Jewelry Box with Scroll-Sawn Side Panels
- Swiveling TV/Monitor Stand That's Perfect for the Bedroom or Office
- Scroll-Sawn Bookends — 3 Different Patterns

www.woodsmith.com

Woodsmith

No. 126 December, 1999

Publisher Donald B. Peschke

Editor Terry J. Strohman

Associate Editors Jon Garbison, Vincent Ancona

Art Director Todd Lambirth

Senior Illustrators David Kreyling, Dirk Ver Steeg, Mike Mittermeier

CREATIVE RESOURCES

Creative Director: Ted Kralicek • *Project Developer:* Ken Munkel • *Sr. Project Designers:* Kent Welsh, Kevin C. Boyle • *Shop Manager:* Steve Curtis • *Shop Craftsman:* Steve Johnson • *Senior Photographer:* Crayola England

SPECIAL PUBLICATIONS

Executive Editor: Douglas L. Hicks • *Art Director:* Steve Lueder • *Senior Graphic Designers:* Chris Glowacki, Cheryl L. Simpson • *Assistant Editors:* Joseph E. Irwin, Craig Ruegsegger • *Graphic Designer:* Vu Nguyen

CIRCULATION

Subscriber Services Director: Sandy Baum • *New Business Director:* Glenda K. Battles • *New Business Mgr.:* Todd Bierle • *Promotion Mgr.:* Rick Junkins • *Renewal Mgr.:* Paige Rogers • *Billing Mgr.:* Rebecca Cunningham • *Cir. Marketing Analyst:* Kris Schlemmer • *Asst. Subs. Mgr.:* Joy Krause • *Creative Mgr.:* Melinda Jo Haffner • *Sr. Graphic Designer:* Mark Hayes

CORPORATE SERVICES

Controller: Robin Hutchinson • *Sr. Account.:* Laura Thomas • *Accts. Payable:* Mary J. Schultz • *Accts. Receivable:* Margo Petrus • *Production Dir.:* George Chmielarz • *Production Assistant:* Susan Rueve • *Electronic Publishing Director:* Douglas M. Lidster • *Network Administrator:* Cris Schwanebeck • *Pre-press Image Specs.:* Troy A. Clark, Minniette Johnson • *New Media Manager:* Gordon C. Gaippe • *Web Site Art Director:* Gene Pedersen • *E-Commerce Analyst:* Carol Schoeppler • *Web Site Editor:* Holly Kilborn • *Web Site Prod. Specialist:* Adam Best • *H.R. Assistant:* Kirsten Koele • *Admin. Assistant:* Julia Fish, Sherri Ribbey • *Receptionist:* Jeanne Johnson • *Mail Room/Delivery:* Lou Webber • *Building Maint.:* Ken Griffith

WOODSMITH MAIL ORDER

Operations Dir.: Bob Baker • *Customer Service Mgr.:* Jennie Enos • *Warehouse Supr.:* Nancy Johnson • *Buyer:* Linda Jones • *Tech. Service Rep:* John Audette • *Admin. Assist.:* Nancy Downey • *Cust. Serv. Reps.:* Tammy Truckenbrod, Anna Cox, Deborah Rich, April Revell, David Gaumer, Chrissy Rea • *Warehouse:* Sylvia Carey, Dan Spidle, Eric Tullis, Sheryl Knox

WOODSMITH STORE

Manager: Dave Larson • *Assistant Manager:* Paul Schneider • *Sales Staff:* Pat Lowry, Wendell Stone, Jim Barnett, Kathy Smith, Larry Morrison, Harold Cashman • *Office Mgr:* Vicki Edwards

Woodsmith® (ISSN 0164-4114) is published bimonthly (Feb., Apr., June, Aug., Oct., Dec.) by August Home Publishing Company, 2200 Grand, Des Moines, IA 50312.

Woodsmith® is a registered trademark of August Home Publishing. **Copyright**© 1999 August Home Publishing Company. All rights reserved.

Subscriptions: Single copy: $4.95. One year subscription (6 issues), $21.94. (Canada/International add $10 per year, U.S. funds.)
Periodicals Postage Paid at Des Moines, IA and at additional offices. USPS/Heartland Press Automatable Poly.
Postmaster: Send change of address to *Woodsmith*, Box 37112, Boone, IA 50037-2112.
Subscription Questions? Write to *Woodsmith*, P.O. Box 842, Des Moines IA 50304-9961 or call 1-800-333-5075, 8:00 am to 5:00 pm, Central Time, weekdays. Or send an e-mail to: orders@woodsmith.com
E-Mail: woodsmith@woodsmith.com
World Wide Web: http://www.woodsmith.com

Printed in U.S.A.

SAWDUST

Time. It's one thing that always seems to be in short supply around the holidays. When you're trying to make woodworking projects to give as gifts, this presents a couple of problems.

If you want to make a project that's really unique, it usually means it's going to take a long time to complete. On the other hand, you don't want to begin a project that is so basic that it's not very interesting to build.

In this issue we've come up with a few projects that solve these problems. They look great; they're interesting to build and don't take long to complete.

BOOKENDS. Take the scroll-sawn bookends shown on page 20 for instance. Here's a great weekend project. And with three different designs of scroll-sawn panels to choose from, there's sure to be one to your liking.

JEWELRY BOX. Then on page 26 there's a jewelry box with scroll-sawn panels that give the box an elegant, hand-carved look. Here again, you have a choice of panel designs: a classic dove or holiday poinsettias.

OTHER PROJECTS. We also have a couple of other interesting projects in this issue. First, there's a two-drawer dressing mirror that begins on page 6. This heirloom project sits on top of a dresser and features an arch top mirror frame and two dovetailed drawers.

Another project that could fit on top of a dresser is the swivel TV stand on page 16. It holds a VCR and allows you to turn your TV for easy viewing. But best of all, it's quick and easy to build.

Terry

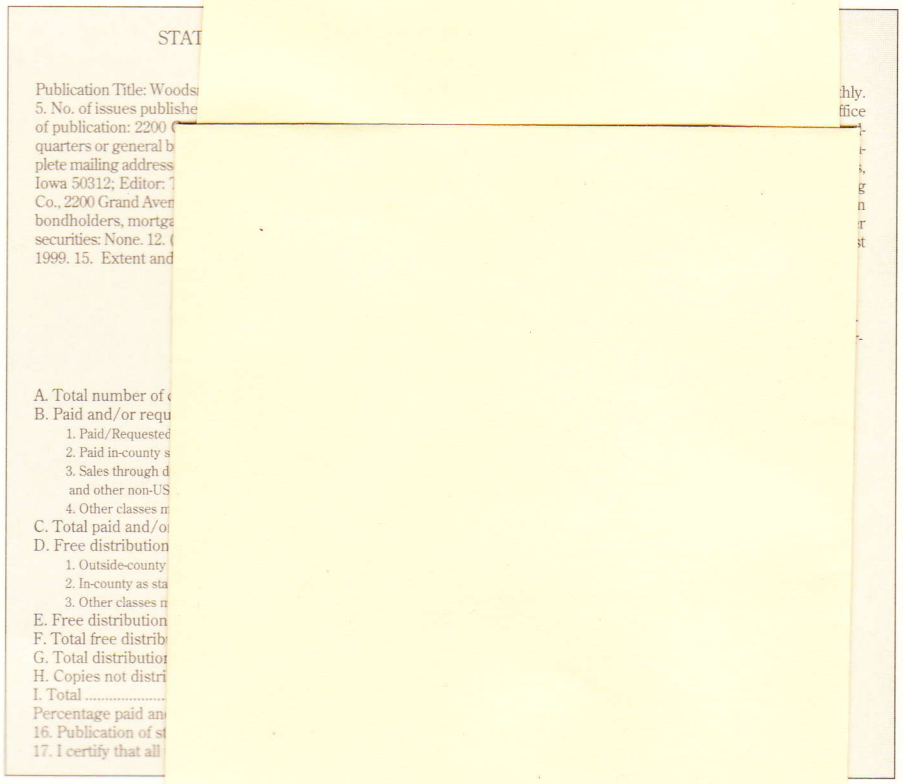
STAT

Publication Title: Woods
5. No. of issues publishe
of publication: 2200
quarters or general b
plete mailing address
Iowa 50312; Editor:
Co., 2200 Grand Aven
bondholders, mortga
securities: None. 12.
1999. 15. Extent and

A. Total number of
B. Paid and/or requ
1. Paid/Requested
2. Paid in-county s
3. Sales through d
and other non-US
4. Other classes m
C. Total paid and/o
D. Free distribution
1. Outside-county
2. In-county as sta
3. Other classes m
E. Free distribution
F. Total free distrib
G. Total distributio
H. Copies not distri
I. Total
Percentage paid an
16. Publication of st
17. I certify that all

A LOOK INSIDE

CONTENTS

Features

Two-Drawer Dressing Mirror 6

Designed to sit on top of a dresser, this mirror is handy for checking your make-up or straightening your tie. And it features two small drawers in the base which are great for storage.

Tabletop TV Stand 16

Here's a TV stand with a different "spin." The top of this stand is fastened to a Lazy Susan so it swivels. And the compartment beneath the top is a perfect place to hold a VCR.

Scroll-Sawn Bookends 20

Whether you have a collection of dimestore paperbacks or a leather-bound set of fine literature classics, these scroll-sawn bookends will make a fitting addition to your "library."

Working with Brass 24

Working with brass isn't much different than working with wood. It's "soft" enough to be machined with carbide-tipped woodworking tools — provided you follow the helpful hints and tips found in this article.

Scroll-Sawn Jewelry Box 26

At first glance, the sides of this elegant jewelry box look to be hand-carved. But you won't need any carving tools. We'll show you how to make the panels with a scroll saw.

Departments

Tips & Techniques 4
Shop Notes 14
Sources 35

Dressing Mirror *page 6*

TV Stand *page 16*

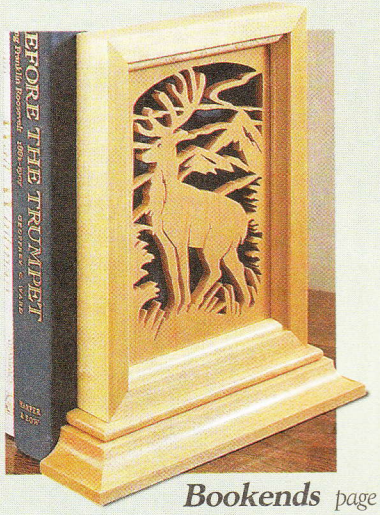

Bookends *page 20*

Jewelry Box *page 26*

TIPS & TECHNIQUES

Magnetic Stop Block

In the past, whenever I needed to cut several short pieces to the same length, I clamped a stop block to the rip fence of my table saw. The block prevents the cut-off pieces from getting trapped between the rip fence and the blade.

But recently, I came up with an idea that avoids the hassle of fiddling around with clamps. Instead of using a clamp, I made a magnetic spacer block. It's just a hardwood block with a pair of small magnetic catches inserted into one edge, see drawing.

The magnets hold the stop block securely against the fence. And when I'm done, I simply store the block out of the way on the side of the saw cabinet.

Yosh Sugiyama
Redding, California

Editor's Note: If the face of your rip fence is wood or aluminum, you can place the magnetic catches in the bottom of the stop block.

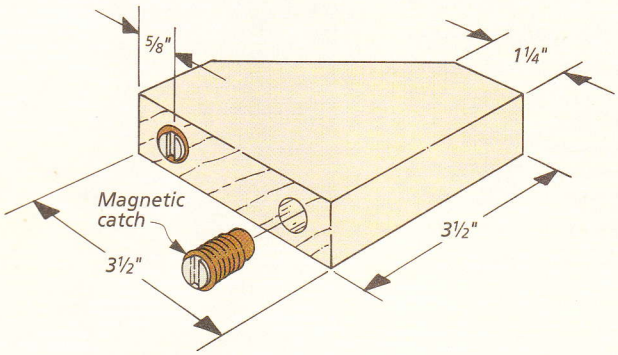

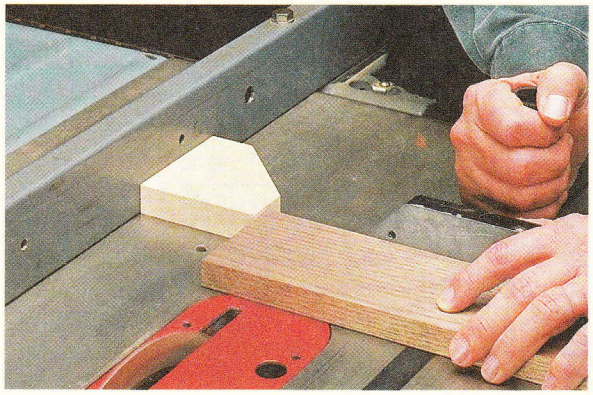

Assembly Jig

I've made several of the holiday centerpieces that you featured in *Woodsmith* No. 114 to give as gifts. One of the trickier parts of the project is gluing up the three rings that make up the base of the centerpiece, see photo. It's difficult to keep the rings aligned while clamping them together.

To make things easier, I made a simple assembly jig. The jig consists of nothing more than a few dowels mounted in a plywood base. But the dowels are spaced so that they keep the rings perfectly aligned while the glue sets up.

To make the jig, start with a square piece of ¾"-thick plywood, see drawing at right. Then draw a circle in the center of the plywood that is equal to the inside diameter of the centerpiece base (5").

Now drill four ¾"-dia. holes that are just barely touching the inside of the circle. The dowels are glued into these holes after being cut to length.

To use the jig, all you have to do is place the rings over the dowels, see detail 'a.' (Kind of like a ring-toss game at a carnival.)

Jess Tobler
Shelton, Washington

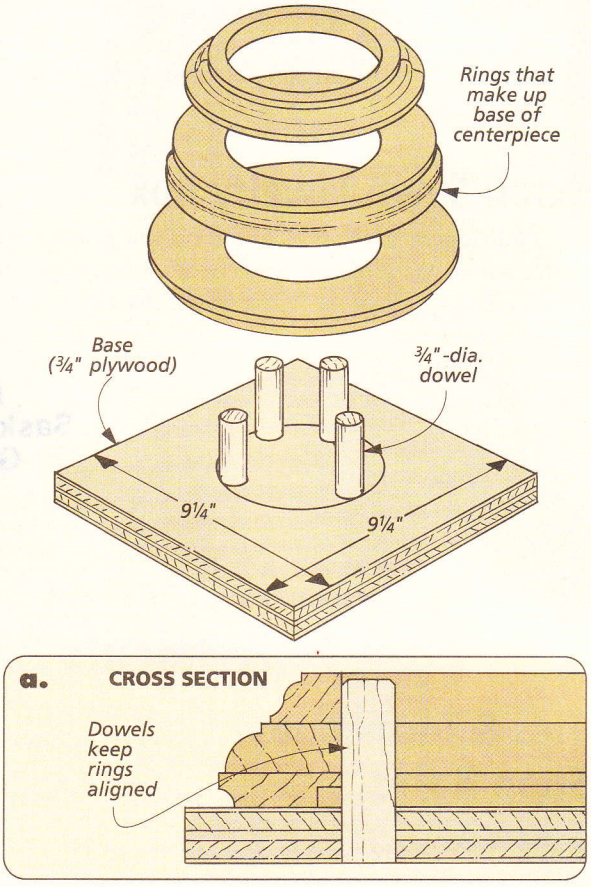

Hole Saw Relief

I've never had much luck with using a hole saw. First the wood starts to smoke. Then the teeth on the saw clog and start to burn. When I'm finished, my hole saw (and my workpiece) look like burnt toast.

But recently, a friend told me about a "secret" technique he has for using hole saws. To prevent the bit from burning when cutting a hole, he simply drills a small clearance hole beforehand to help clear the shavings created by the bit.

To do this, start by lightly scoring the hole with the hole saw, just enough to mark the outside diameter, see Figs. 1 and 1a.

Next, drill a ½" or ¾" clearance hole all the way through the workpiece, inside the scored "circle" created by the hole saw, see Figs. 2 and 2a. The trick here is to make sure that this hole is just touching the edge of the circle.

Now when you drill the hole with the hole saw, the clearance hole acts as an escape chute, preventing the chips from clogging the hole and burning the teeth on the hole saw, see Fig. 3.

Randy Dender
Tallahassee, Florida

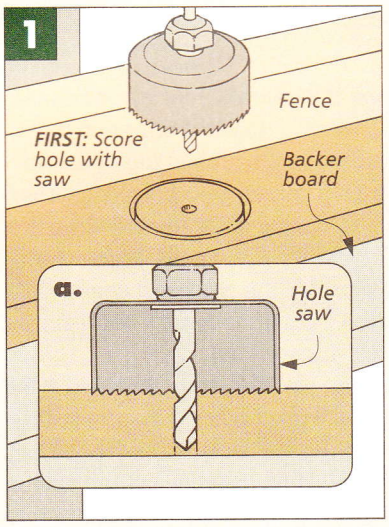

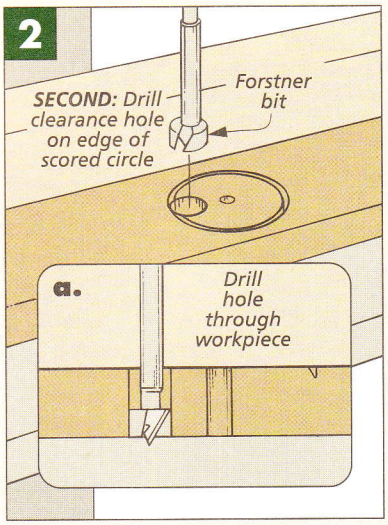

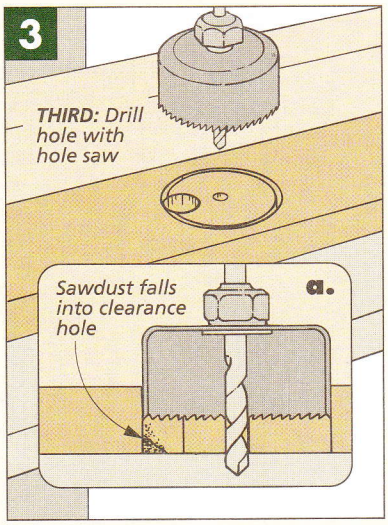

Dividing A Circle

I've been using a method for dividing a circle into equal parts that doesn't involve any math. Instead, I use a circular saw blade.

Simply place the blade on a pattern or workpiece. Then divide the number of teeth on the saw blade by the number of parts you want to divide the circle into. Using this quotient, simply count off the teeth on the blade, marking off the segments as you go along, see drawing.

The only catch is that the number of teeth on the blade will determine how many equal segments you can divide the circle into, see note in drawing.

Henry Ellis
Melbourne, Florida

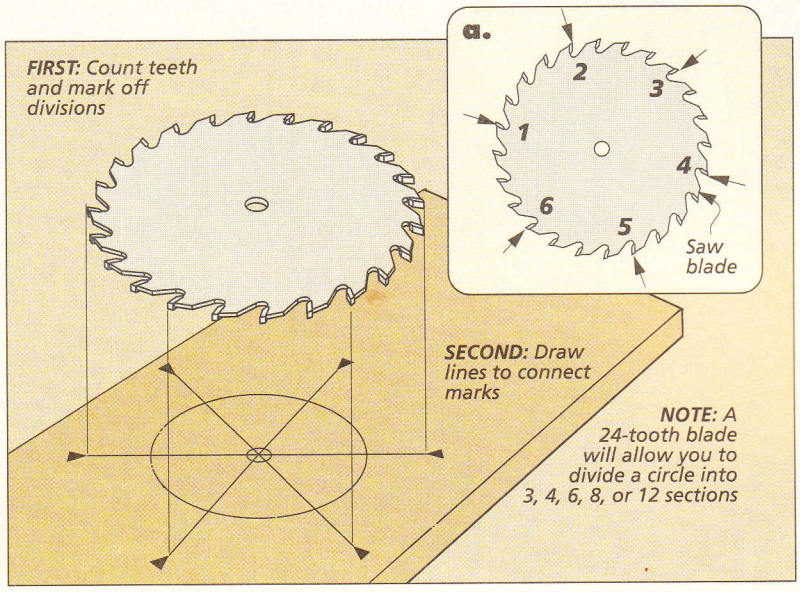

SUBMIT YOUR TIPS

If you have an original shop tip, we would like to hear from you and consider publishing your tip in one or more of our publications. Just write down your tip and mail it to: *Woodsmith,* Tips and Techniques, 2200 Grand Avenue, Des Moines, Iowa 50312. Please include your name, address and daytime phone number in case we have any questions. If you would like, FAX it to us at 515-282-6741 or send us an e-mail message at woodsmith@woodsmith.com. We will pay up to $200 if we publish your tip.

Eliminate Static Cling

Whenever I use a clear plastic guard on my table saw or router table, I have trouble with sawdust clinging to the guard and obstructing my view. (Especially in really dry weather.)

I've found that this problem is easily solved by wiping off the inside and outside of the guard with an anti-static fabric softener sheet (the kind you toss in the clothes dryer).

Clyde Skaggs
Baldwinsville, New York

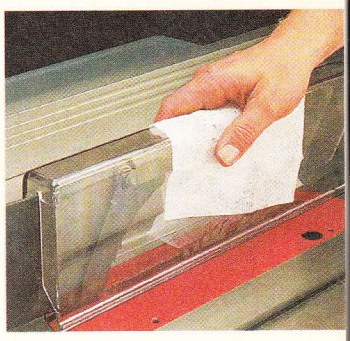

FEATURE PROJECT

TWO-DRAWER DRESSING MIRROR

Sometimes it's the details that make a project appealing. In this project, curves, bevels, delicate moldings, and profiles create a classy look.

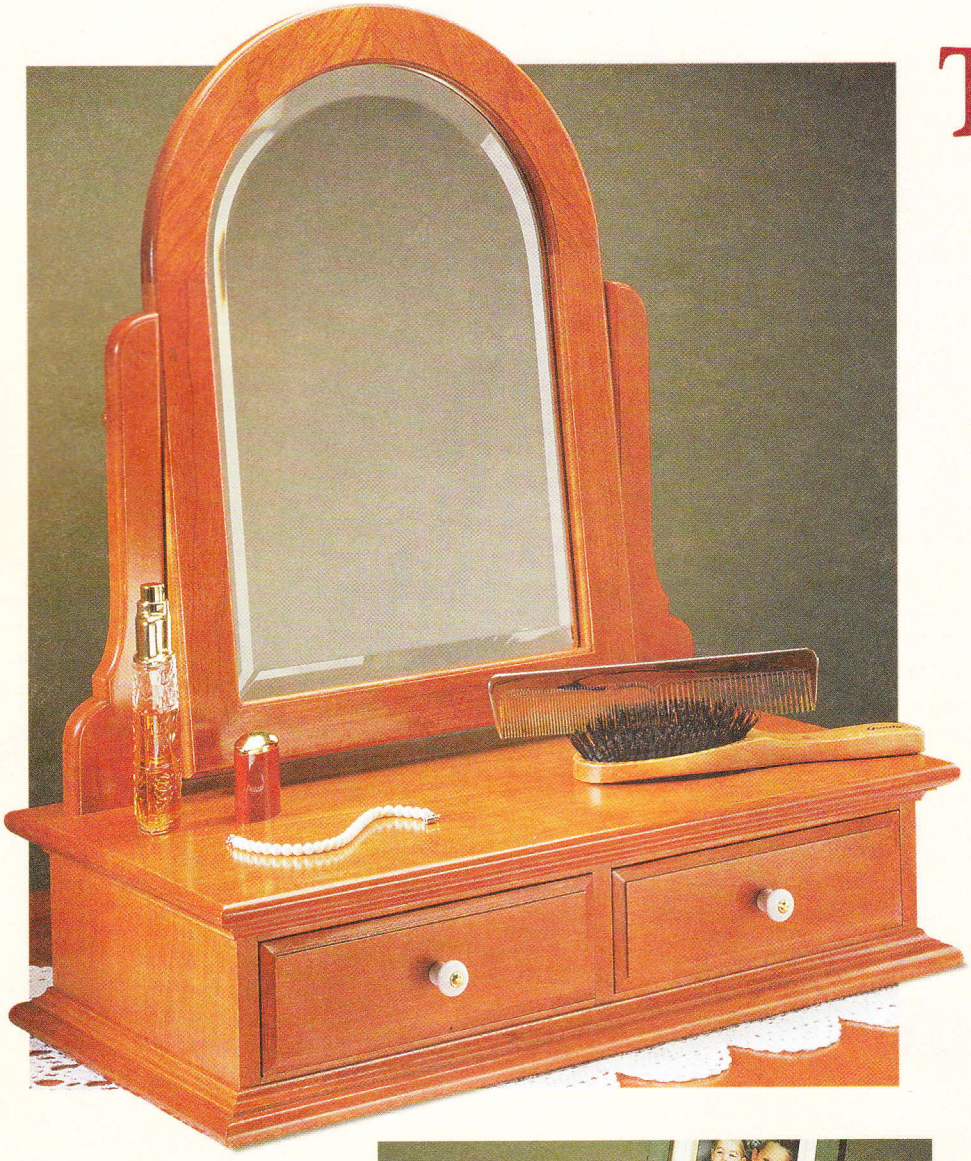

The first thing that catches your eye when you look at this project (aside from your reflection in the mirror) is the arched top of the mirror frame. The top curves gracefully in a perfect semi-circle, transitioning smoothly into the sides of the frame. And from a woodworking standpoint, this is probably the most challenging part of the project as well (although it's not really as difficult as you might think).

Once you look past the arch, however, you begin to discover a lot of other things that make this project so appealing. Details like the delicate profile that is routed on the edges of the mirror frame and the arms supporting it. And the narrow bevels that create the raised panels on the drawer fronts. Not to mention the cove molding that wraps around the top and bottom of the case. It's the subtle details like these that give this project such an attractive, timeless quality.

MIRROR. There's one other detail that deserves mentioning and that's the mirror itself. If you look closely, you'll see that the mirror has a beveled edge. In order to get a mirror like this, we had to special order it from a local glass shop.

Now this cost a bit more than using an ordinary flat mirror. And we had to wait a little longer to get the mirror. But I think the end result is well worth it. (Shop Note: If you plan on using a bevel-edged mirror, I strongly suggest that you order the mirror *first* and then size the opening in the back of the frame to fit.)

The mirror frame is mounted to the support arms with pivoting hardware, allowing it to tilt up or down. That way you can adjust the mirror to the right angle, no matter how tall you are.

FUNCTIONAL. As beautiful and useful as it is, the mirror is not the only part of this project that is designed for function. The two drawers beneath the mirror are the perfect size for storing handkerchiefs, change, or other small objects. So handy, in fact, that you may want to build them even without the mirror, see photo at left. This way, you have a simple storage unit to set on top of a dresser or bureau.

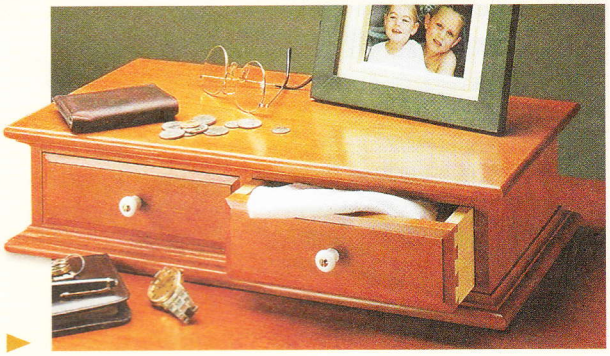

Don't need a mirror? *Build just the case and drawers for a handy dresser-top storage unit.* ►

Construction Details

OVERALL DIMENSIONS:
22 11/16"H x 19 5/8"W x 10"D

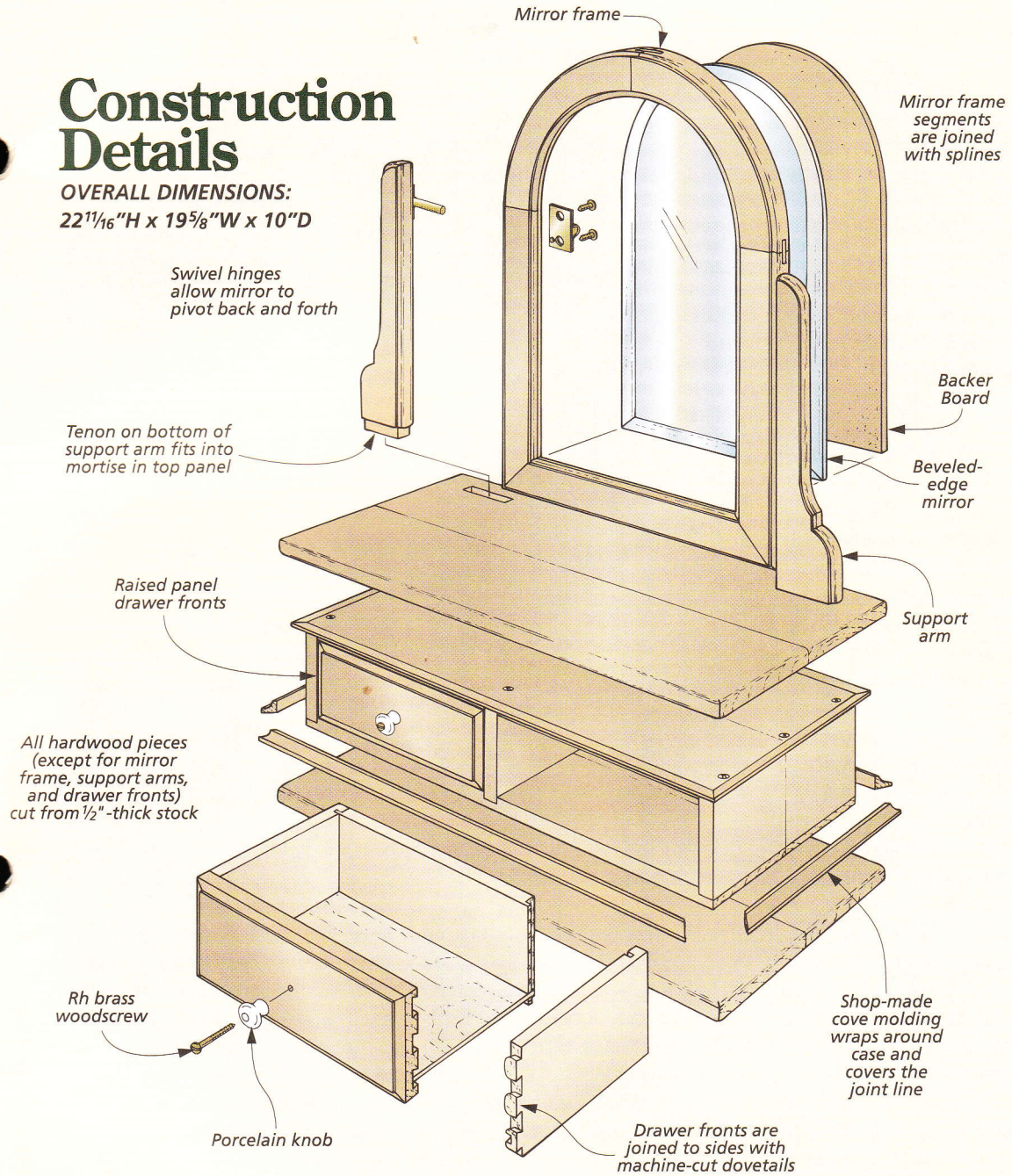

SUPPORT ARM PATTERN
(1 square = 1/2")

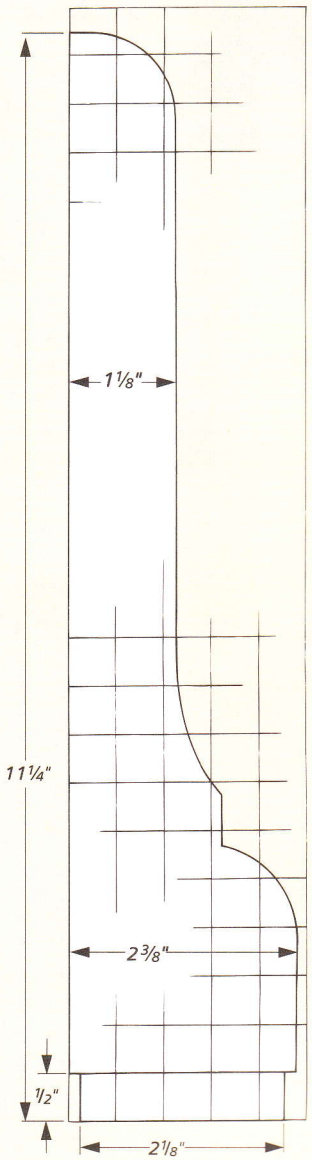

MATERIALS, SUPPLIES & CUTTING DIAGRAM

A	Case Top/Bottom (2)	1/2 x 8 1/2 - 18 1/8	**I**	Frame Bottom (1)	3/4 x 1 1/2 - 12 1/2	•	(18) #6 x 3/4" Fh Woodscrews
B	Case Sides (2)	1/2 x 8 1/2 - 3 3/16	**J**	Frame Arches (2)	3/4 x 3 1/2 - 13 1/2	•	(2) Mirror Swivel Hinges w/Screws
C	Case Divider (1)	1/2 x 8 1/4 - 3 3/16	**K**	Backer Board (1)	1/4 hdbd. x 10 - 15	•	(1) 1/4"-10"x15" Arch-Top Beveled Mirror
D	Case Back (1)	1/4 ply. - 17 5/8 x 3 3/16	**L**	Drawer Fronts (2)	3/4 x 2 5/8 - 8 1/4	•	(8) #18 x 3/4" Wire Brads
E	Top/Bottom Panels (2)	1/2 x 10 - 19 5/8	**M**	Drawer Backs (2)	1/2 x 2 5/8 - 7 3/4	•	(2) 3/4"-Dia. Porcelain Knobs
F	Molding (1)	3/8 x 3/8 - 120	**N**	Drawer Sides (4)	1/2 x 2 5/8 - 7 7/8	•	(8) 5/8" Brass Turnbuttons
G	Support Arms (2)	3/4 x 2 3/8 - 11 1/4	**O**	Drawer Bottoms (2)	1/4 ply. - 7 1/2 x 7 3/4	•	(4) 3/4"-Dia. Felt Dots
H	Frame Sides (2)	3/4 x 1 1/2 - 11	**P**	Drawer Stops (2)	1/2 x 1/8 - 8 1/4		

1/2" x 6" - 96" Cherry (Two Boards @ 4 Sq. Ft. Each)

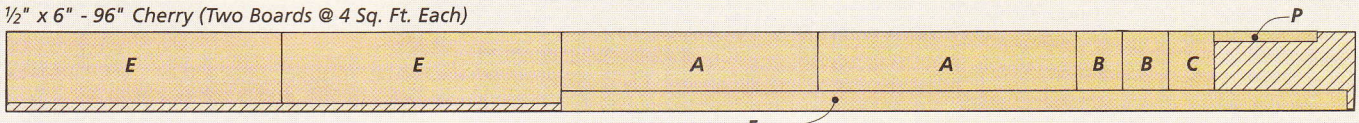

3/4" x 4 1/2" - 72" Cherry (2.25 Bd. Ft.)

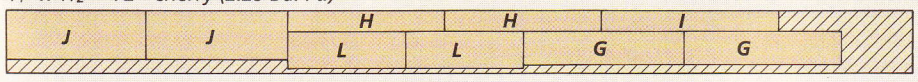

1/2" x 5 1/2" - 30" Maple (1.1 Sq. Ft.)

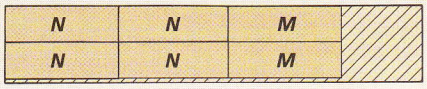

Also Needed: 24" x 24" sheet of 1/4" Cherry plywood and 24" x 24" sheet of 1/4" hardboard

▲ *A divided compartment in the base holds a pair of drawers that are added later.*

Base

To build this project, I started with the base, since it serves as the foundation for the mirror. This base is really just a shallow carcase with a vertical divider that splits the interior down the middle into two drawer compartments. The case is then sandwiched between top and bottom panels, and moldings are attached.

I began by gluing up panels for the **case top** and **bottom (A)**, the **case sides (B),** and the **case divider (C)**, see Case Exploded View at right. The main thing you want to pay attention to here is the grain direction. It's important for the grain orientation to be the same for all the pieces. This means that the case sides and divider will actually be wider than long.

The challenge in creating a case like this is in joining the sides and divider to the top and bottom. Whenever I'm joining end grain to face grain, I don't like to rely on glue alone to hold the joint. So I reinforced these joints by using rabbets, dadoes, and screws.

Rabbets are cut on the ends of the case top and bottom to hold the sides. And a dado is cut on the center of the case top and bottom to hold the divider, see Figs. 1 and 1a.

Before these pieces can be assembled, you'll need to bury a dado blade in an auxiliary fence on your table saw and cut a rabbet all along the back edge of the case top, bottom, and sides, see Figs. 2 and 3. This groove will hold a plywood back that's added later. (The divider doesn't get a rabbet because it fits up against the back.)

Once the rabbets are complete, the case sides and divider can be glued and screwed between the case top and bottom, see detail 'b.' As you're doing this, check to make sure that all the pieces are flush along the front.

BACK. To complete the case, all you need to do is add a **back (D)**. This is just a piece of 1/4" plywood that is cut to fit in the opening and then glued in place, see details 'a' and 'c' above.

TOP & BOTTOM PANELS. The case is sandwiched between two identical

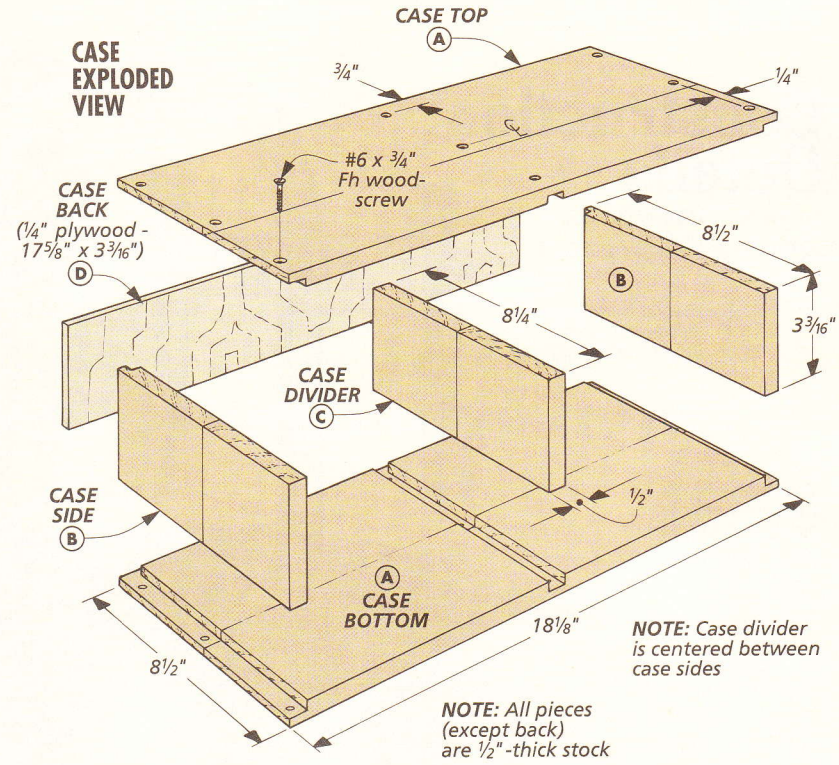

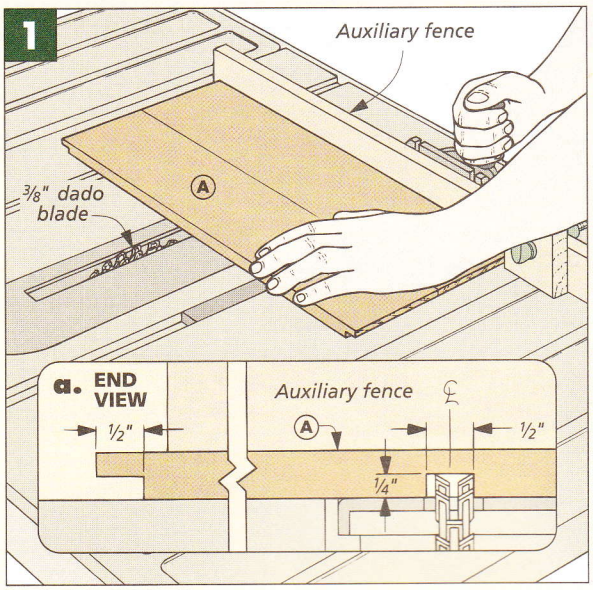

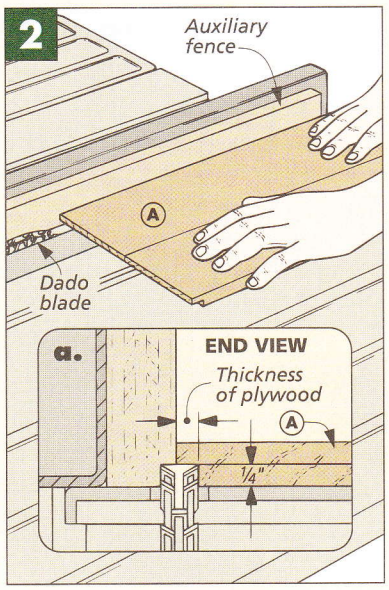

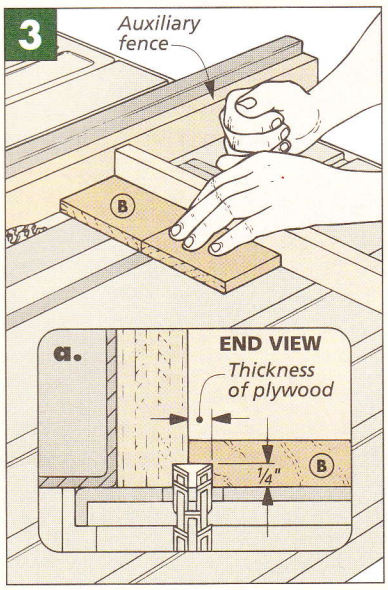

solid wood panels. The blanks for both the **top** and **bottom panels (E)** are glued up using ½"-thick stock and cut to the same size, see Panel Exploded View at right.

Before attaching the panels to the case, however, there are a couple of things to do. First, the mortises for the posts that will hold the mirror need to be cut in the top panel. These are through mortises, and they are made by simply drilling a row of overlapping holes on the drill press, see Fig. 4.

After drilling out the bulk of the waste, use a chisel to carefully pare away the remaining waste, squaring up the ends and sides of the mortises, see Fig. 5. The trick here is to use a sharp chisel so that the cutting edge slices through the wood fibers rather than tears through them.

ROUT BULLNOSE. Once the mortises are complete, you can rout the bullnose profile on the edges of both the top and bottom panels, see Fig. 6. This is a two-step operation. First, a ⅛" roundover is routed all around one side of each panel, see Fig. 6a. Then a ¼" roundover is routed on the edges of the other side, see Fig. 6b.

GLUE PANELS TO CASE. The panels are glued to the case so that the side with the ¼" roundover is facing the case, see detail 'a' in exploded view. But whenever you're gluing two large flat surfaces together like this, there's a tendency for the panels to slip. So to hold the panels in place, I used some small brads. I simply nailed the brads into the top and bottom of the case, leaving them about ⅜" high. Then I snipped off their heads with a pair of wire cutters. The brads "bite" into the panels and prevent them from slipping during the glue-up.

MOLDING. The final step in completing the base is to add cove molding around the top and bottom of the case. This **molding (F)** is made by routing a ¼" cove on both edges of a wide blank, see Fig. 7a. Then the molding is ripped free of the blank on the table saw, see Figs. 7 and 7b. Once this is done, the molding can be mitered to length and glued in place around the top and bottom of the case, see Panel Exploded View.

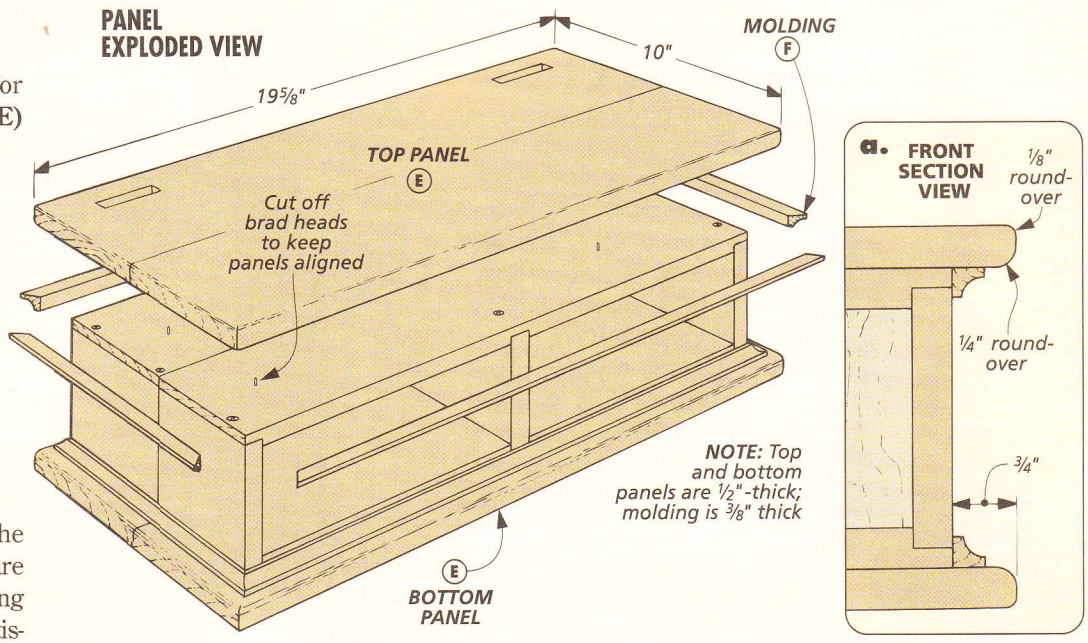

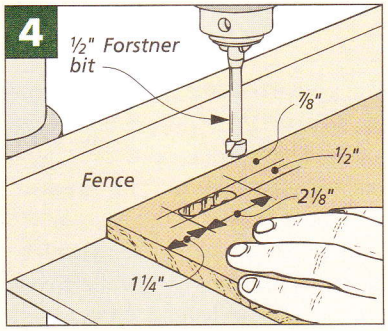

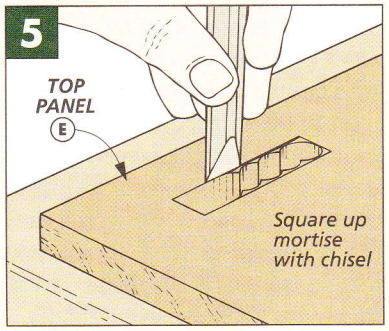

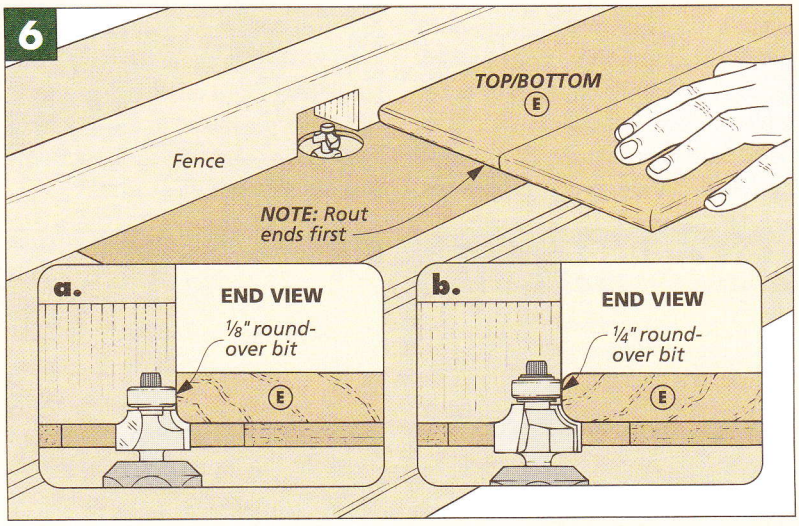

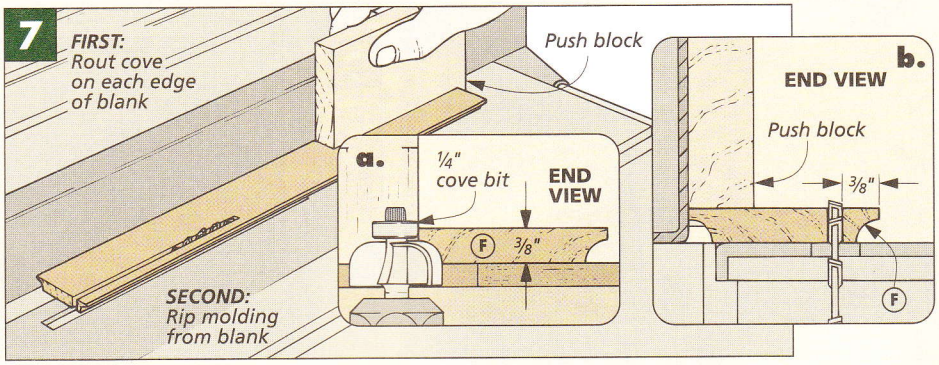

Support Arms & Frame

Up to this point, the construction has been straightforward. But the arch of the mirror frame and curves of the support arms offer a bit of a challenge. The frame is made up of five segments, all joined by splines, see drawing at right. And it's supported by a pair of upright arms.

I began with the **support arms (G)**. These start off as 3/4"-thick blanks. Using the pattern on page 7, draw the profile of the arm on each blank. But don't cut the arms out just yet. It's easier to cut the tenons first, while the blanks are still square.

The tenons are made with a dado blade on the table saw, see Fig. 8. You don't want a sloppy fit here. So it's a good idea to sneak up on the final width and thickness of the tenon to get a tight fit, see Fig. 8a.

CUT TO SHAPE. Once the tenons are cut to fit the mortises, you can go ahead and cut the arms from the blanks on a band saw or scroll saw. Try to cut just up to the layout line without crossing it, and then sand the edges smooth with a drum sander.

ROUT EDGES. To complete the support arms, a roundover with a small shoulder is routed on both sides of each arm. This can be done on a router table with a round-over bit, see Figs. 9 and 9a. But since the router bit can't get into the inside corners of the arms, you'll have to come back with a chisel to square these up, see box below.

After you've routed the roundovers on both arms, you can glue the arms into the mortises in the base. When you're doing this, you'll want to make sure that the arms are parallel to one another and perpendicular to the top panel so that the mirror frame will fit in between them without binding.

FRAME. At this point, the base looks something like a miniature goalpost, with its arms raised to the sky. Your "goal" is to construct a mirror frame that fits between these arms.

The pieces that make up the mirror frame are 1 1/2" wide. You can start by ripping the **frame sides (H)** and **frame bottom (I)** to this width. But the two pieces that make up the **frame arch (J)** start off as wider blanks, see Frame Exploded View.

The frame pieces are joined with cross-grain splines. To cut the grooves for these splines, I started by mitering the frame sides and frame bottom pieces to length, see exploded view. I also mitered the ends of the blanks for the arches to create a 90° corner. Then I cut a 1/8"-wide slot on the ends

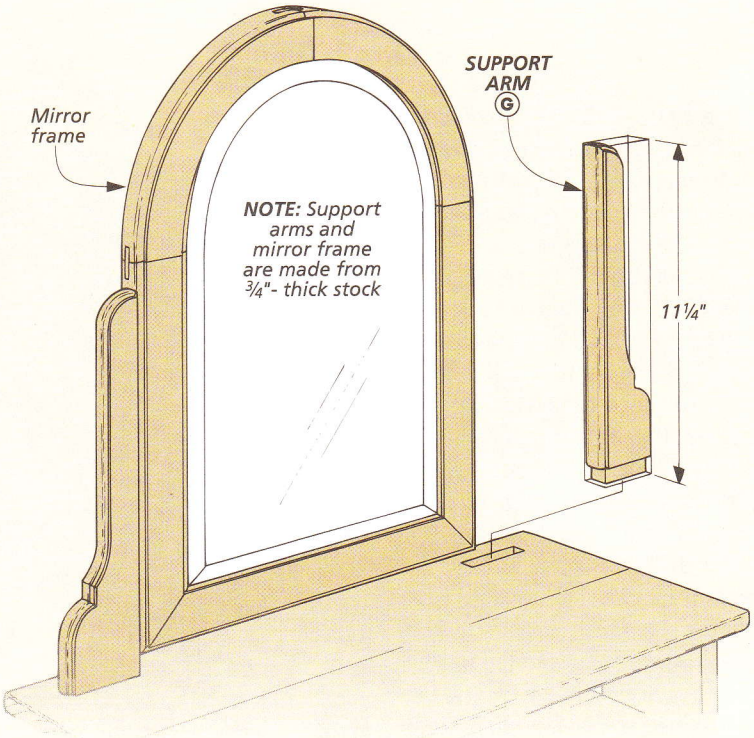

SQUARE CORNERS

Router bits are great for creating a profile on a straight or curved edge. But because they cut in a circular motion, they can't work into the back of an inside corner, see left photo.

A quick solution is to come in with a sharp chisel and carefully remove the excess material to square up the inside corner, see photo below right.

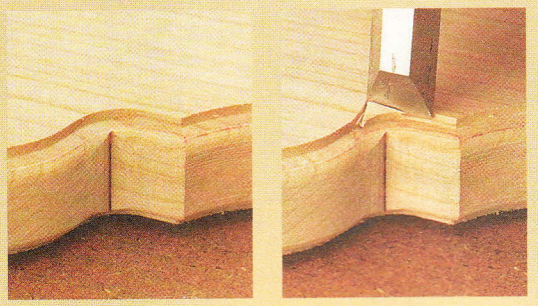

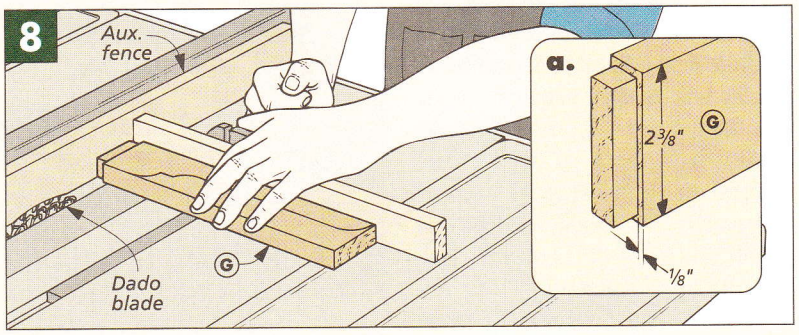

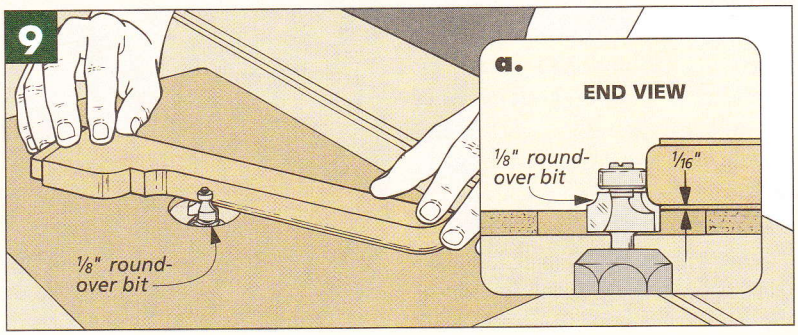

of each piece to hold the splines. (For more on cutting the slots and making the splines, see page 14.)

The frame is assembled in two sections. This makes it easier to lay out and cut the arch. First, I glued the frame sides and bottom together in a U-shaped assembly. And to keep the frame sides parallel, I cut a temporary spacer to place in between the two sides near the top while clamping the pieces together.

Next, I glued the two arch blanks together in a V-shaped assembly, see Frame Exploded View at right. Because it's difficult to get clamps on these pieces, I simply held them together for about five or ten minutes while the glue set up.

LAY OUT ARCH. Once the glue is dry, you're ready to lay out the arch. This is simply a matter of using a compass to draw two concentric half circles on the arch blanks. To do this, carpet tape the two frame assemblies down on a flat surface. (I used the top of my workbench.) You'll also need to tape down a scrap wood block in the middle of the frame opening to provide a place to rest the point of your compass, see Fig. 10.

The centerpoint of the arch is located halfway between the two frame sides and 1/4" above the joint line where the arch segments meet the ends of the frame sides, see Fig. 10. This is where you should place the point of your compass when drawing the two half-circles on the arch blanks. Shop Note: Because the centerpoint of the arch is 1/4" higher than the ends of the frame sides, you'll have to draw lines to connect the ends of the half-circles with the frame sides.

Once the arch is laid out, you can remove the blank from your bench and rough out the shape on the band saw, see Fig. 11. Try to keep the blade about 1/16" away from the layout lines. This way, you'll be able to sand the arch to final shape later so that it makes a smooth transition into the sides of the frame.

ASSEMBLY. Before gluing the arch section to the rest of the frame, trim back the splines in the mitered corners of the frame with a small hand saw and a chisel, just like you see in Figs. 12 and 12a. Then the arch can be glued to the rest of the frame, again using cross-grain splines at each joint, see Fig. 13.

Once the glue is dry, trim the splines and sand the arch smooth on the inside and outside of the frame, using a drum sander on a drill press.

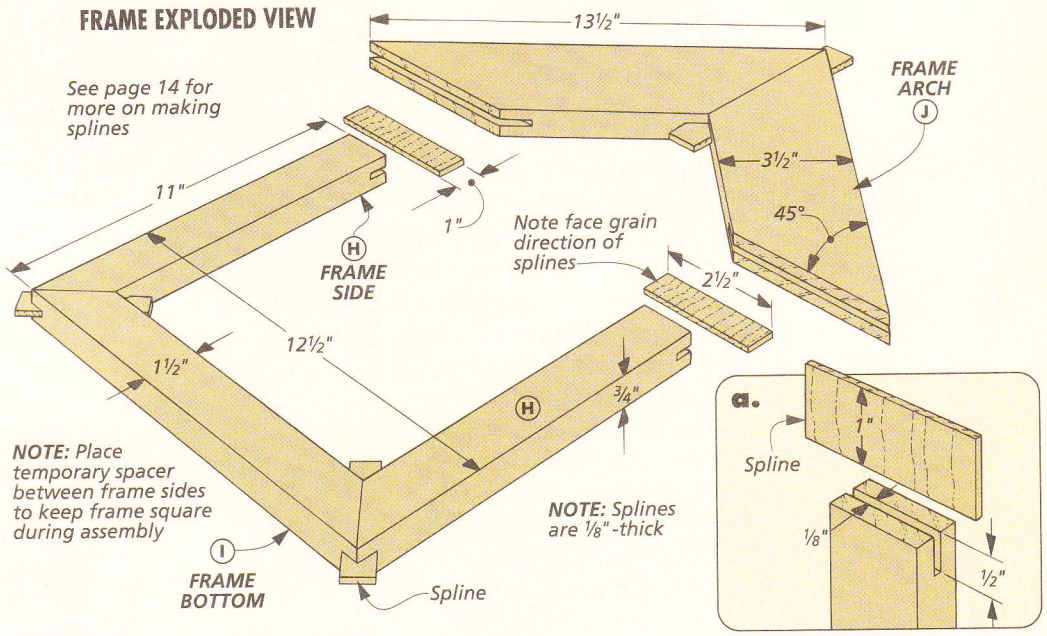

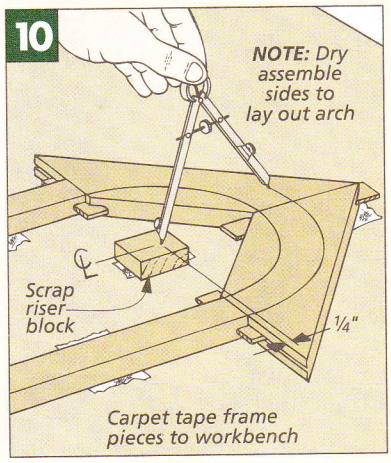

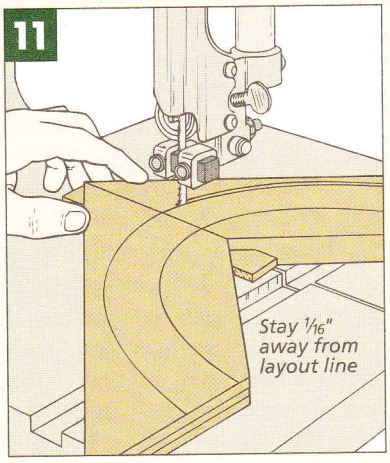

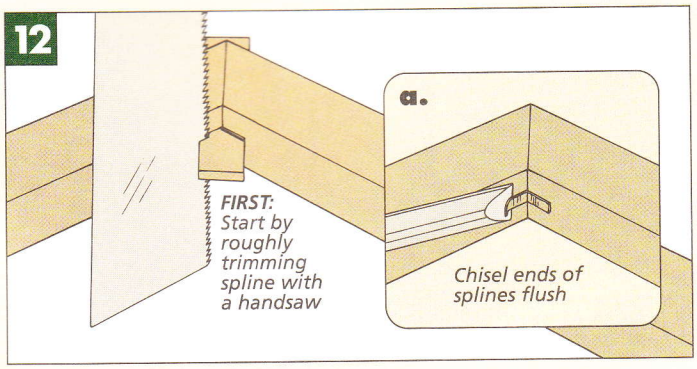

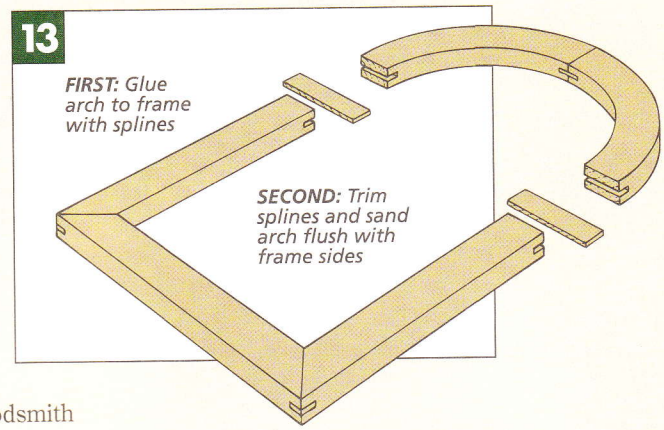

Mirror & Drawers

Although the basic frame is complete, there are still a couple of details to take care of before the mirror can be installed in the frame.

First, a roundover is routed on the inside and outside edges of the frame to match the profile on the arms, see Figs. 14 and 14a. Shop Note: You don't need to round over the back of the inside edge since a rabbet will be cut on this edge to hold the mirror.

Like the support arms, you'll have to come in with a chisel to square up the corners of the profile where the router bit can't reach, see Fig. 14b.

MIRROR. I used a 1/4"-thick mirror with a 1"-wide bevel all around the edge. Because I wanted as much of the bevel to show as possible, I ordered a mirror that was only slightly larger than the frame opening. To do this, I simply made a template out of 1/4" hardboard that overlapped the opening in the frame by 1/4" on all sides, see Mirror Exploded View. Then I took this template down to a local glass shop and ordered the mirror. (Later, this template will be used as a backer board to protect the mirror when it's installed in the frame.)

RABBET. With the mirror in hand, you're ready to rout a rabbet in the back of the frame to hold the mirror and backer board. I replaced the bearing on my rabbeting bit with one that was slightly larger, in order to cut a 1/4"- wide rabbet all around the frame opening, see Figs. 15 and 15a.

HARDWARE. The mirror and **backer board (K)** are held in place by eight brass turnbuttons, see Mirror Exploded View and detail 'a' at right.

To allow the mirror frame to pivot, I added a swivel hinge to each side of the mirror. This is just a pin that is anchored by a pair of straps. One of the straps is attached to the back of the mirror frame, and the other is attached to the support arm, see detail 'a' in Exploded View.

DRAWERS

I started making the drawers by cutting the **drawer fronts (L), drawer backs (M)** and **drawer sides (N)** to size, see Drawer Exploded View on opposite page. The drawer sides

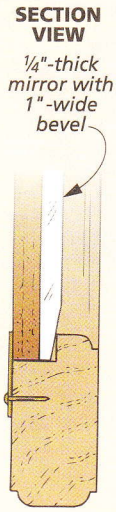

▲ *Sneak up on the depth of the rabbet so that the backer board ends up flush with the back of the frame.*

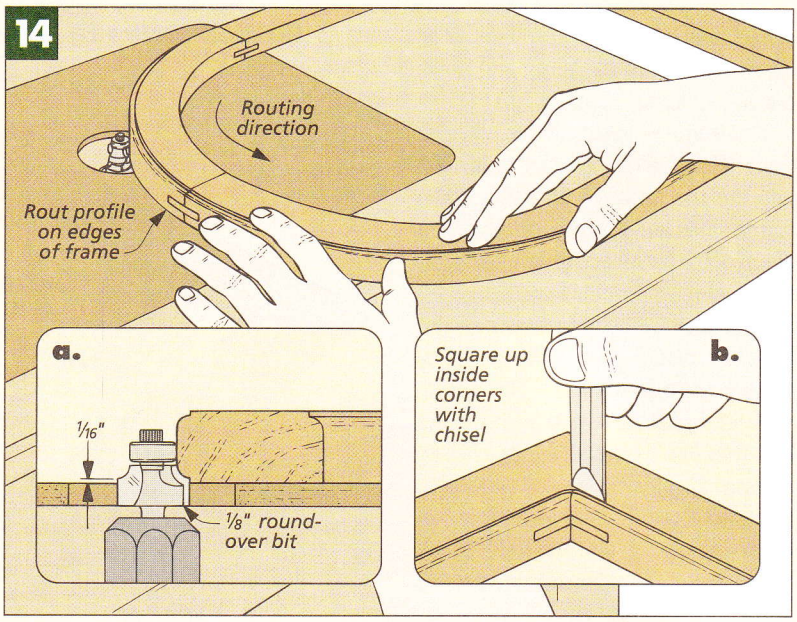

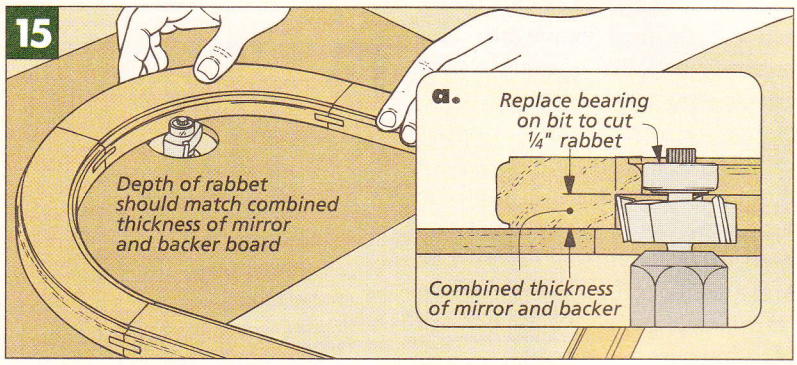

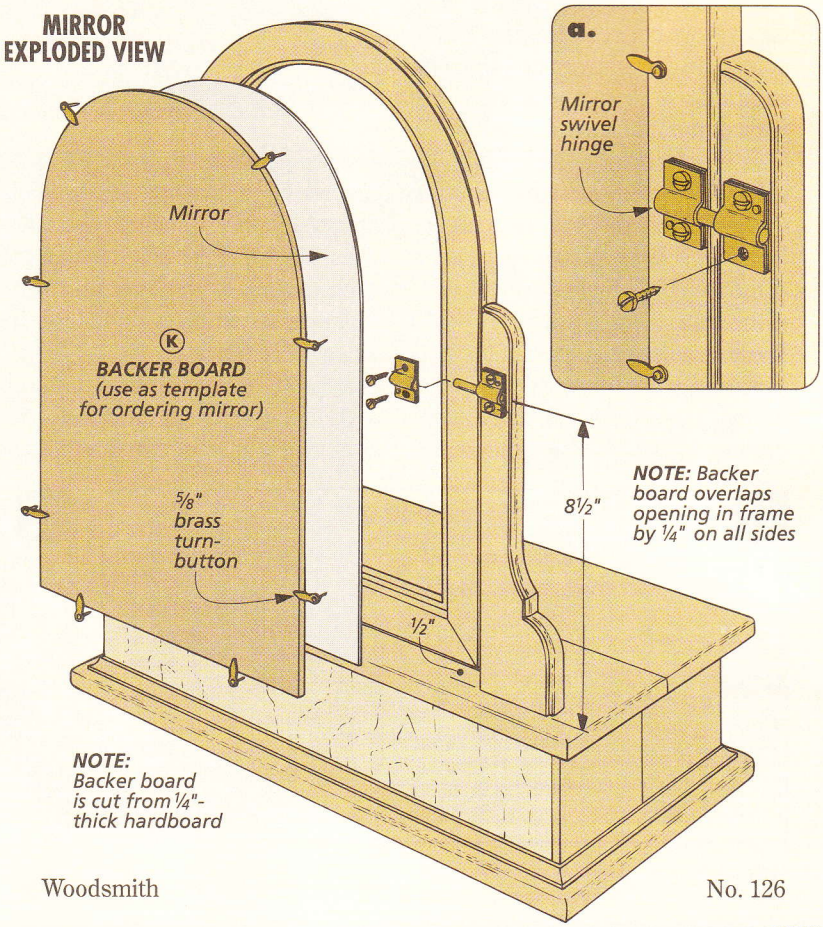

and backs are cut from ½"-thick stock (maple). But since the drawer fronts are beveled on the edges, I used ¾"-thick cherry stock for these pieces.

The drawer fronts are joined to the sides with machine-cut, half-blind dovetails, and I cut these next. The dovetails are ½"-wide and are spaced ⅞" on center, to conform to most dovetail jigs, see detail 'b' at right.

To join the back of the drawer to the sides, I used a locking dado joint, see detail 'a' in exploded view. This is a little easier to make than the dovetails, since all the cuts can be made on a table saw.

RAISED PANELS. To create the raised panels on the drawer fronts you'll need to tilt the blade on your table saw and run the drawer front through the saw on edge, see Figs. 16 and 16a. Although this isn't difficult, I found it helpful to use a simple jig to hold the workpiece upright and give it some extra support.

The saw blade tends to leave swirl marks on the face of the bevels. And since the blade is tilted, it also leaves an angled shoulder on the edge of the raised field. So I made a small angled sanding block and cleaned up the beveled edges, see Fig. 17.

DRAWER BOTTOM. Before assembling the drawers, a groove is cut along the bottom edge of the inside face of each drawer piece, see detail 'c' above. Then two plywood **drawer bottoms (O)** are cut to fit in the grooves, and the drawers can be glued up.

DRAWER STOPS. The last pieces to add are the **drawer stops (P)**. These are just two thin strips of wood. They're glued in place at the back of each drawer opening so that the beveled edge of the drawer front is flush with the edge of the case, see detail 'c' in the Drawer Exploded View.

Once the stops were in place, I applied a polyurethane finish to the project. Then I added a knob to the front of each drawer, see exploded view above. And finally, to prevent the base from scratching the top of a dresser, I added a felt dot to each corner on the bottom, see Fig. 18. W

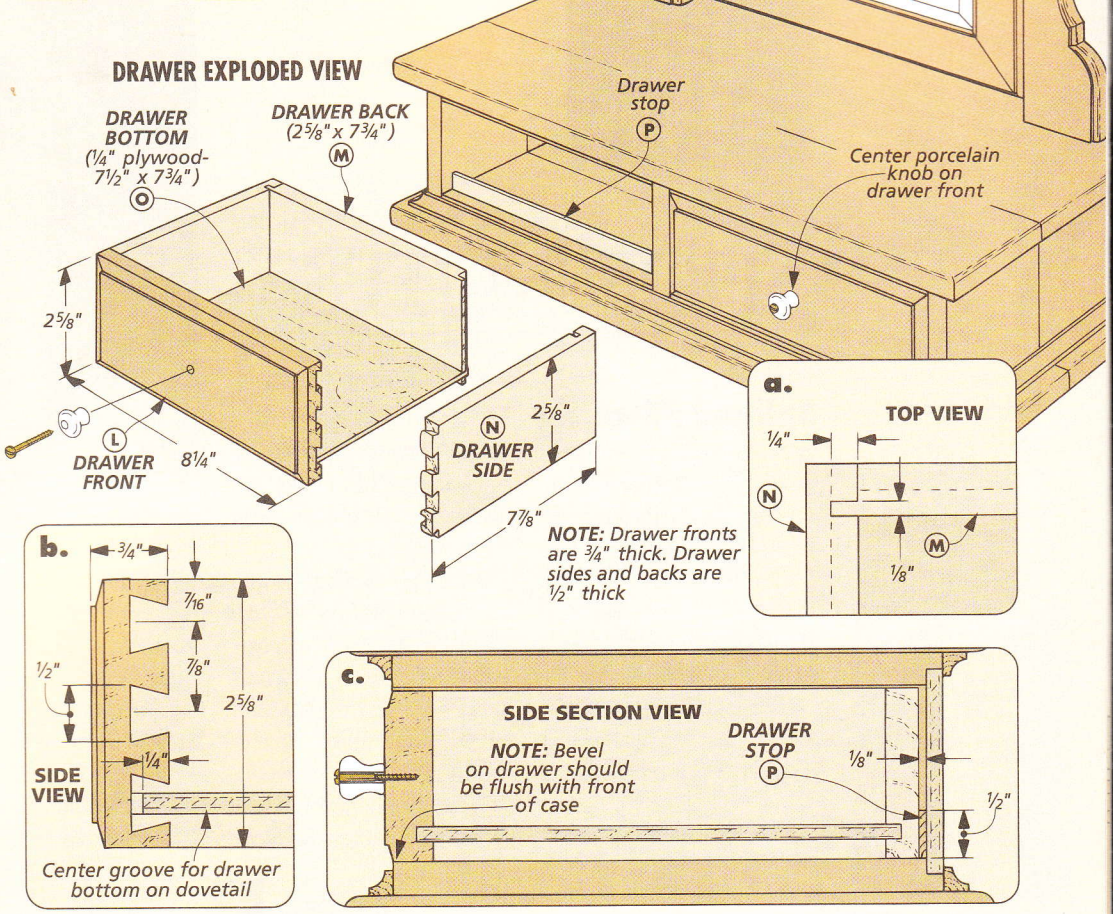

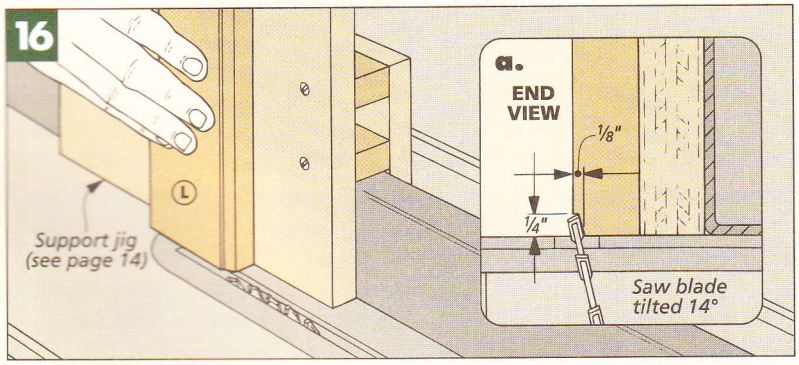

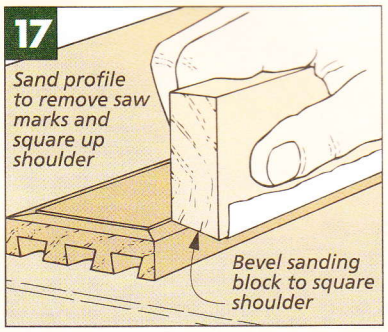

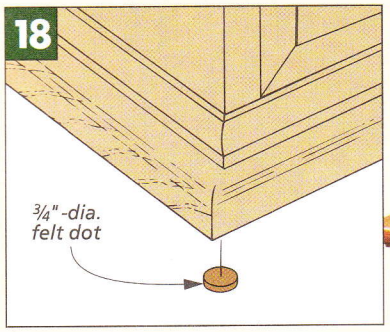

The swivel hinges allow the mirror to be tilted to any angle.

SHOP NOTES

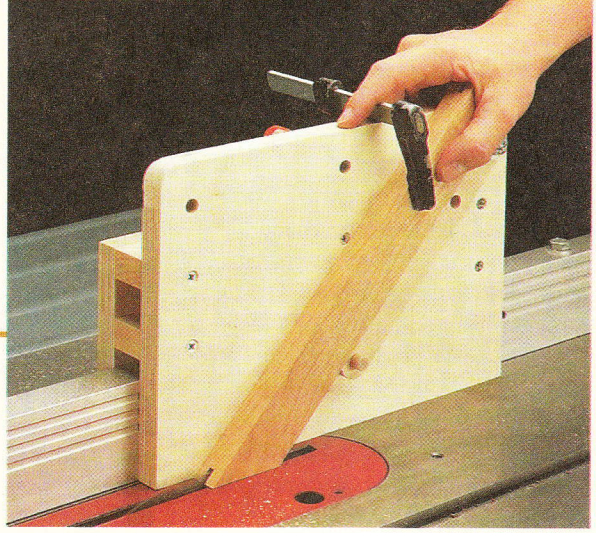

Splined Miter Jig

Splined miters are a great way to join a frame like the one used in the dresser mirror. But it always makes me a little nervous to stand a workpiece on end and run it through the saw to cut a slot for the spline.

To make this procedure safer, I built a simple jig that supports the workpieces while cutting the splines, see photo. This allows you to keep your hands away from the blade.

The jig is just a simple carriage designed to straddle the rip fence of your table saw. Two plywood fences are screwed together with a couple of hardwood spacers in between, see exploded view below.

An adjustable stop is fitted to the front of the jig to support the frame pieces at 90° or at 45° to the left or right. A dowel, bolt, washer, and wing nut are used to hold the stop to the face of the jig, see Figs. 1 and 1a.

USING THE JIG. To use the jig, simply place it over the rip fence and clamp your workpiece against the stop and the face of the jig.

Shop Note: To ensure that all the slots will line up at assembly, keep the same face (front or back) of each workpiece against the jig when cutting the slots.

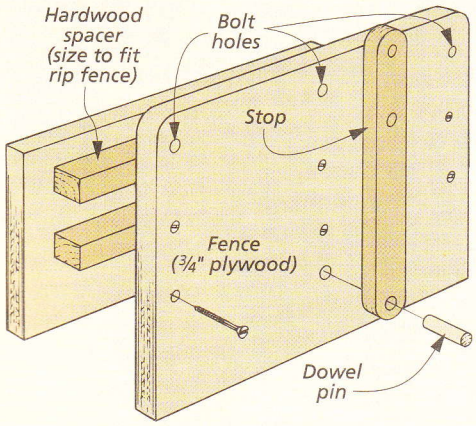

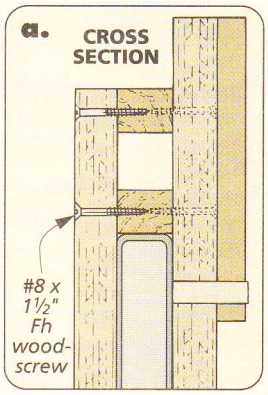

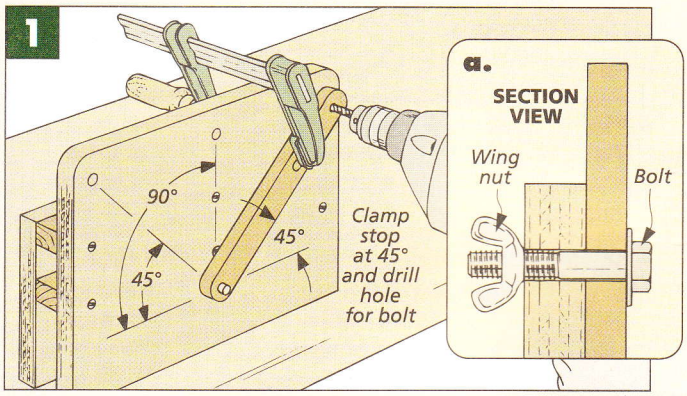

Cutting Splines

When it comes to cutting the splines to fit in the miter joints shown above, it's important to pay attention to the grain direction.

CROSS-GRAIN SPLINES. In order to get the strongest possible joint, the grain on the spline should run across what you would normally consider the "width" rather than the "length" of the spline, see drawing at left.

To make these splines, I cut them from the end of the board, but not like you might think.

CUT KERFS. I stood the board on end, raised the blade a little over 1", and cut two kerfs, see Figs. 1 and 1a. I simply flipped the piece between passes to keep the thickness of the splines identical. (To support the blank, I used the same jig that I made for cutting the spline slots, see above.)

CUT SPLINES FREE. Then I lowered the blade and placed the board face down to cut each spline free from the board, see Figs. 2 and 2a.

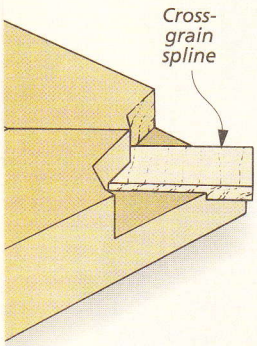

▲ *The grain of a spline should run perpendicular to the joint.*

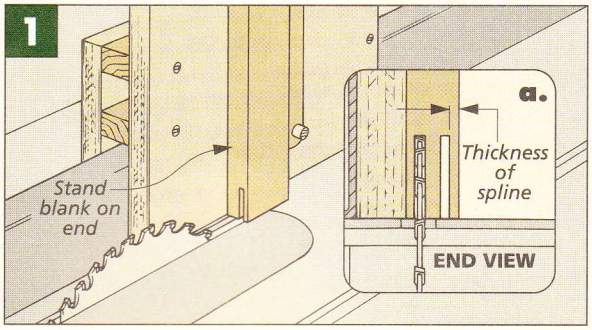

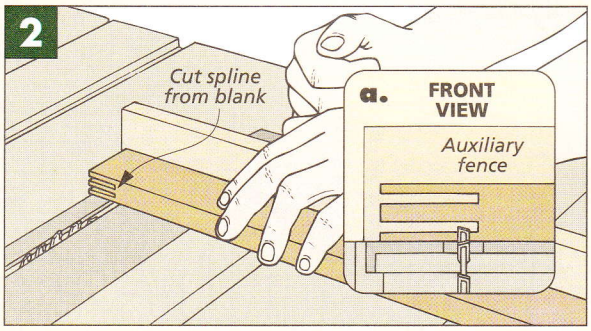

Resawing Thin Stock

Several of the projects in this issue call for thin stock (less than 3/4" thick). Sometimes you can buy thin stock at the lumber yard or through a mail-order catalog, but you'll often pay a premium price.

Another solution is to make thin stock yourself — by resawing a thick piece into two (or more) thinner pieces. This way, the wood costs less, and you get the stock the exact thickness you want.

TABLE SAW. Normally, I like to use a band saw for resawing. But if you don't own a band saw, and the pieces you're resawing aren't too wide (up to 6 inches), you can resaw them on an ordinary table saw.

Resawing on the table saw is basically a ripping operation. But instead of the board lying on its face, it's fed through the blade standing on edge.

SET-UP. The first thing I do when setting up to resaw is to install the proper blade. For the smoothest cut, I like to use a 24-tooth rip blade. A rip blade is thicker, so there's less tendency for it to flex while cutting.

Next, I replace my table saw insert with a shop-built insert that is fitted with a splitter, see box below.

Finally, since I want as much control over the workpiece as possible, I attach a tall auxiliary fence to the rip fence, see Fig. 1. This helps keep the workpiece standing up straight during the resawing.

MAKE CUTS. To make the cut, I set the fence to resaw the board about 1/16" thicker than the final desired thickness. (After I finish resawing, I remove the marks left by the blade with a hand plane or thickness planer.)

Begin resawing by using a thick push block to feed the board through the blade. Shop Note: Use a push block that hooks over the back of the workpiece, see Fig. 1. Also, be sure to hold the board tight to the fence. (A featherboard clamped to the saw table can sometimes help.)

I usually make the cut in a series of passes. After making the first pass, flip the piece end-for-end (keeping the same face against the fence) and make a second cut on the opposite edge, see Fig. 1.

On stock that's 3" wide or less, try to complete the cut with the second pass. (The fewer cuts the better.) But if the stock is wider than 3", raise the blade in 1/2" increments and run both edges through the saw a second time. Continue raising the blade in 1/2" increments until the cut is complete.

WIDE BOARDS. If the stock is wider than the capacity of your table saw (about 6" for most saws), you can use a hand saw to finish the cut and separate the two pieces, see margin photo. (A rip saw works best.)

There's one other thing to mention. When resawing on the table saw, you may experience small ramps at the ends of the resawn piece, see Fig. 2.

To solve this, start with a blank that is about 6" longer than the desired length, then cut off the ends after you're done resawing. W

▲ *You can make your own thin stock by resawing thicker boards on your table saw.*

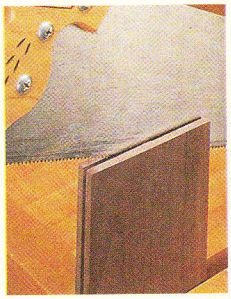

▲ *For wider boards, a hand saw can be used to complete the cut.*

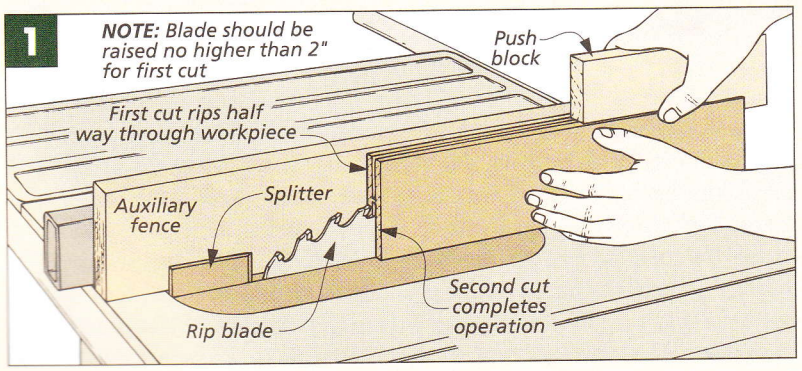

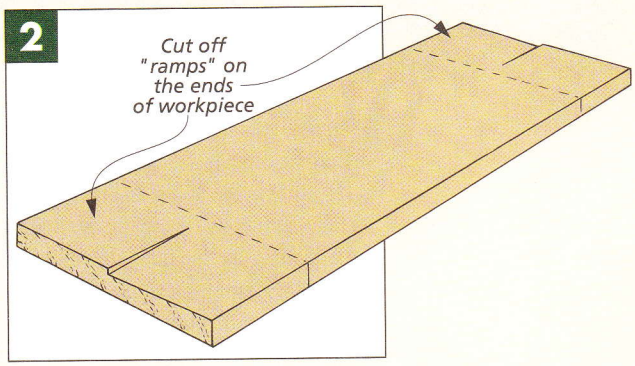

SPLITTER INSERT

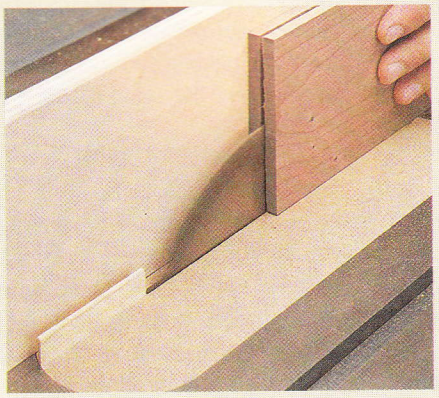

Whenever I resaw thin stock on the table saw, I like to use a zero-clearance insert with a splitter. The insert prevents the workpiece from slipping down between the blade and the opening. And the splitter keeps the wood from "pinching" the back of the saw blade and kicking back.

I like to make my inserts out of hardwood or MDF, see drawing. (I use the insert that came with my saw as a template for laying out the insert.) And I glue in a splitter made out of a piece of 1/8"-thick hardboard.

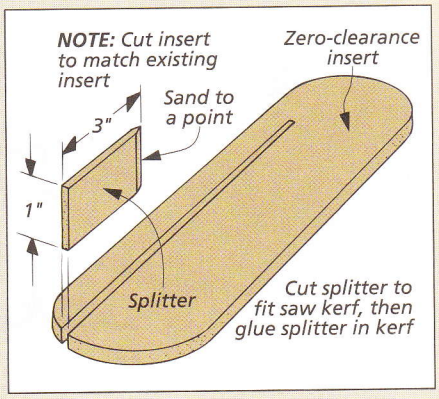

TABLETOP TV STAND

A revolving top on this stand allows you to position your television for the best possible viewing angle while the base remains stationary.

When I was growing up, I thought that Eddie Stenson was the luckiest kid in the world. That's because Eddie's family was the first one on our block to get a television set.

Today of course, just about everyone has a TV. In fact, it's not at all uncommon to have an additional television in a den, a bedroom, a kitchen, or even in the workshop.

▲ *The stand can also be used with a computer monitor. And the space beneath the top is perfect for accessory storage.*

But unlike a TV in the living room, television sets in other rooms of the house don't usually occupy a central spot in the room. They often wind up sitting on top of a table, a dresser, or maybe a night stand. And they get moved around a lot in an effort to find the best viewing angle.

That's why we came up with this TV stand. It's designed to hold a small to medium-size television. And it has an open compartment below that's just the right size for a video cassette recorder (VCR).

LAZY SUSAN. But the neatest thing (I think) about this stand is the fact that the top is mounted on a Lazy Susan turntable. This allows you to swivel the TV so that you can see it from just about any spot in the room. And since the top rotates smoothly, you won't have to worry about scratching up the top of your dresser or any other surface on which the TV sits.

COMPUTERS. This project isn't just for TV's however. When set on a desk, it makes a great place for a computer monitor. And instead of a VCR, the compartment beneath the top can be used for storing computer disks, CD's, or other accessories, see photo at left.

Shop Note: We've sized this stand to hold a television set with a 13" to 19" screen. However, some 19" sets have a wider base than others. Therefore, it's best to check the actual dimensions of your television *before* you begin building, then alter the measurements of the stand if necessary.

CONSTRUCTION

I have to admit that when I first saw this project, it reminded me of those exercise devices that were popular a few years ago — the ones that you stand on while twisting your hips.

Although I wouldn't recommend using it for that, this stand is certainly strong enough to support quite

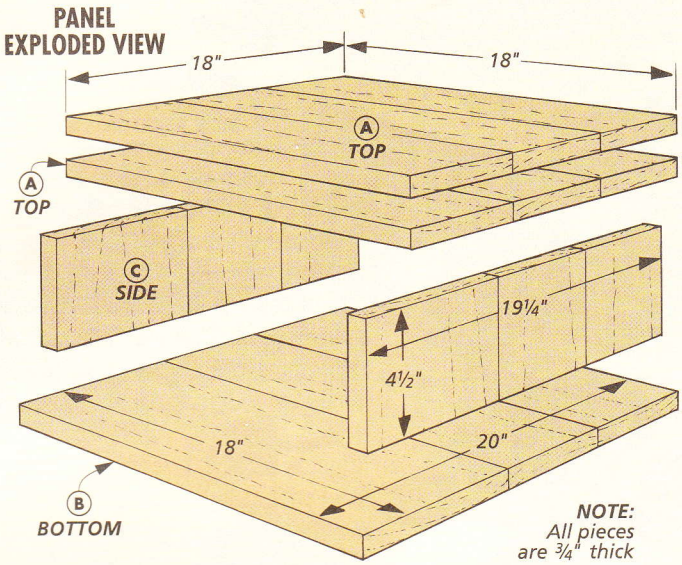

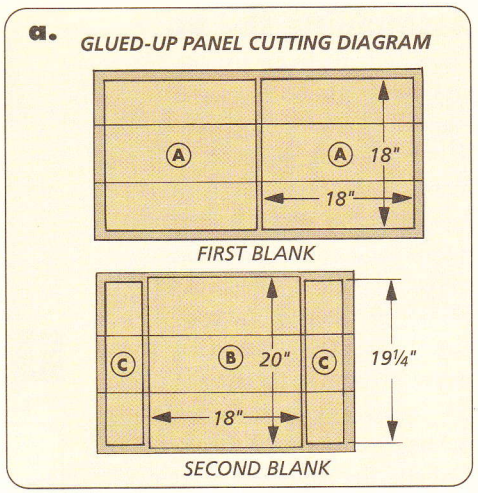

a bit of weight. It's made out of solid, ¾"-thick stock. And we used a heavy-duty Lazy Susan turntable so that even with the weight of a television it will still swivel smoothly and with very little effort. At the same time, we managed to keep the construction quite straightforward.

FIVE EASY PIECES. This entire project consists of five parts, see Panel Exploded View. Two sides are sandwiched between a top and bottom panel. Then a second top panel is added along with a Lazy Susan.

Because all of the pieces are fairly wide (at least 18"), they have to be glued up from narrower boards. Rather than gluing up an individual panel for each piece, however, I decided to glue up two long panels and then cut the individual pieces to length, see detail 'a' above. (For more on gluing up panels, see the box below.)

Two identical pieces for the **tops (A)** are cut from the first blank, see detail 'a.' The **bottom (B)** and **sides (C)** are cut from the second blank.

There's just one thing to keep in mind while you're laying out the parts on your blanks. To allow all sides of the stand to expand and contract evenly, it's important to keep the grain orientation the same on all the pieces. This means that the bottom (B) and the sides (C) are actually going to be wider than they are long.

GLUING UP PANELS

It seems like such a simple thing — gluing up a bunch of narrow boards to make a wide panel of solid wood. But there's a little more to it than first meets the eye.

The goal is to end up with a panel that looks like a single, wide piece of wood. But it also has to be perfectly flat (and stay that way). Reaching this goal is a two-step process — arranging the boards for appearance and fit and then gluing them up.

ARRANGEMENT. The first step is to arrange your boards for uniformity. This means matching the color and grain pattern of adjacent boards, see first and second photos.

In addition to appearance, you're also concerned with how the panel will move with changes in humidity. This depends on the growth rings on the end of each board. If you alternate the rings, each board moves in opposite directions. The end result is a panel that stays flat.

GLUE-UP. Once you have the boards arranged, you still have to glue them up flat. The trick here is to arrange the clamps above and below the panel so they're about 6" apart, see drawing.

If the boards aren't flush, try placing a clamp on the joint line, see third photo below. Or whack them with a mallet and a block of wood, see detail 'b.'

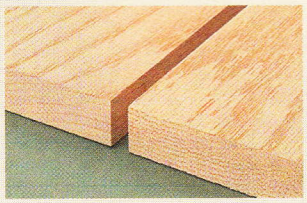

Curved Grain. Arrange adjacent boards so curved grain patterns "merge."

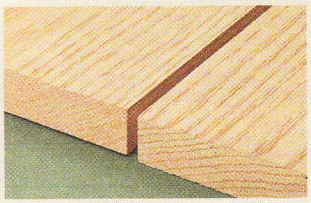

Straight Grain. Side by side, straight-grained boards create an invisible joint.

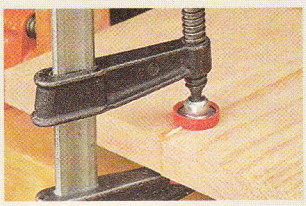

Flush Joint. Tighten a clamp across the end of the joint to draw the boards flush.

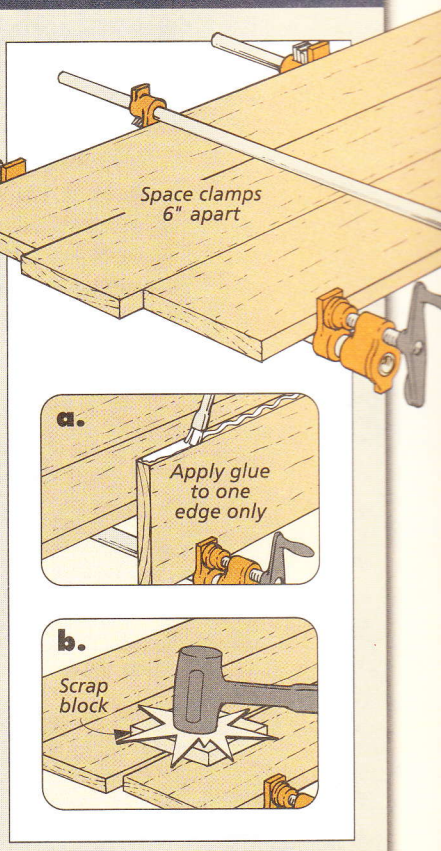

Assembling the Base

Once all five pieces are cut to size, you can begin on the joinery. The sides are joined to the top and bottom with simple stub tenons. These tenons are cut on the ends of the sides to fit in shallow slots that are cut in the top and bottom, see drawing at right.

To make these joints, I started by making the slots in the top and bottom panels. (Shop Note: Only one of the tops receives these slots.) Since the slots are stopped, I couldn't use the table saw to make them. Instead, I routed the slots with a hand-held router equipped with a 1/4" straight bit and an edge guide, as you can see in Figs. 1 and 1a.

If you have a plunge router, this is a good chance to use it. If not, you can still rout the slots with an ordinary router. You'll just have to carefully lower the rotating bit into the wood, making sure that the guide fence is held tight against the edge of the workpiece, see Fig. 1a.

ROUNDOVERS. Once the slots were cut, I created a round-nose profile on both top panels and the bottom panel, see Figs. 2 and 2a. You can do this by simply routing a 3/8" roundover on both sides of the panels. Once you finish routing this profile, you can place the tops and bottom aside while you work on the sides.

STUB TENONS. Both sides have stub tenons cut on the ends to fit in the slots in the top and bottom. To make these, I cut a rabbet on both sides of the workpiece, leaving a tenon in the middle. Take a look at Figure 3 to see what I'm talking about.

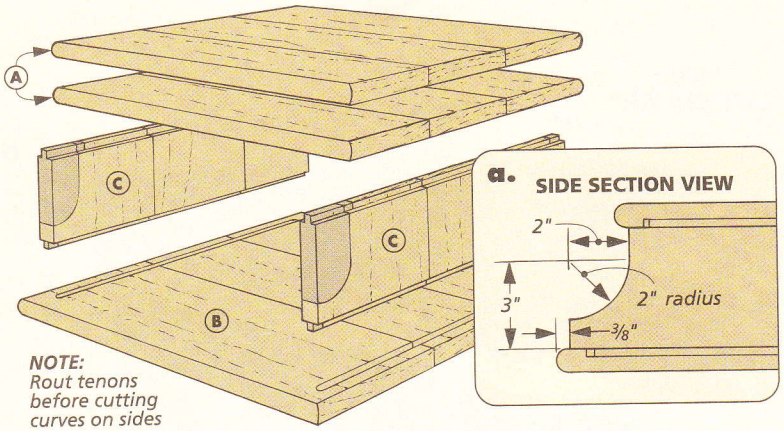

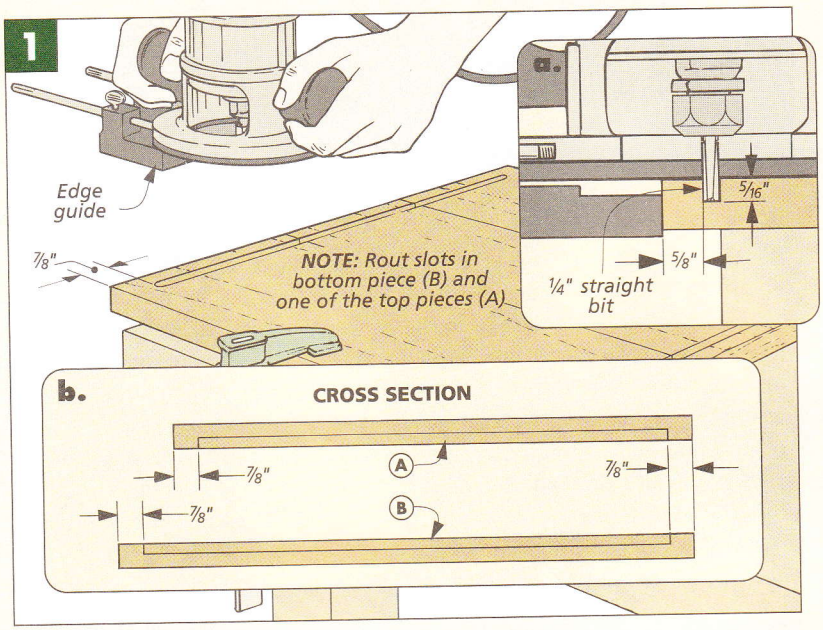

The front edge of each side piece is curved to provide a transition from the top to the large bottom panel, see detail 'a' above. After laying out these curves, I cut them on a band saw. (If you don't have a band saw, you could also use a sabre saw or a coping saw.)

Regardless of the saw you use, the edges of the curves will likely be a bit rough. But a few minutes with a drum sander mounted in a drill press will take care of this.

TRIM THE TENONS. There's one more step before the sides can be glued into the top and bottom. The tenons need to be trimmed back about 5/8" from each end, see Fig. 4a. This is just a matter of first removing most of the waste with a small hand saw. Then the rest of the waste can be pared back with a sharp chisel, as shown in Fig. 4. When you're finished with this, you can glue up the sides, top, and bottom.

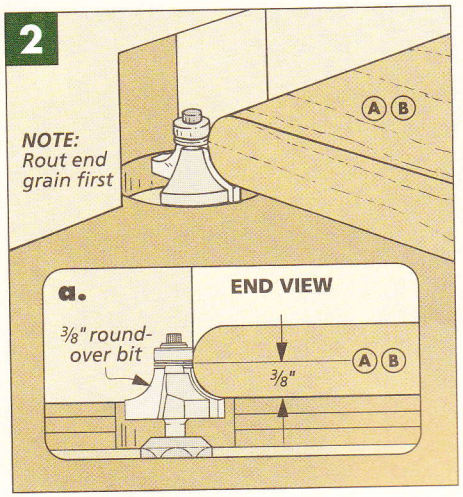

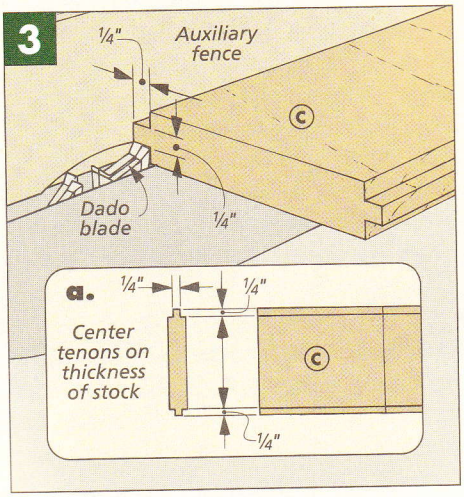

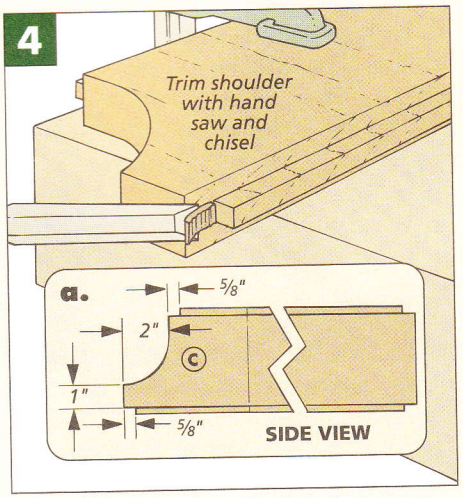

Adding the Top

If you've never installed a Lazy Susan before now, you might not have ever stopped to think about how one is fastened to a project. Once you screw the Lazy Susan down to the base, how do you attach the top? The trick lies in drilling a small access hole through the base. This hole lines up with a similar hole in the mechanism that allows you to attach the upper panel. Take a look at the Lazy Susan Exploded View and detail 'a' at right.

The first step is attaching the Lazy Susan to the base. The turntable is centered on top of the base. A simple way to do this is to draw diagonal lines from corner to corner, see the exploded view at right.

With the Lazy Susan centered on the base, mark the location of the screw holes and the large access hole, just like you see in Fig. 5. (Shop Note: I positioned the Lazy Susan so the access hole was at the back.)

When you've finished marking the holes, set the Lazy Susan aside and drill a 3/4"-dia. access hole through the top of the base, see Fig. 6. To help prevent splintering when the bit exits the hole, I clamped a scrap piece of wood to the base before drilling the hole, see Fig. 6a. Then I transferred the hole location and drilled an identical hole in the bottom of the base.

After drilling pilot holes, the Lazy Susan can be screwed to the top of the base, see Figs. 7 and 7a.

ADDING THE TOP. There's not much to adding the top of the stand. You can start by setting the top face-down on your workbench. Then place the base (upside-down) on the top, making sure the edges line up. Now slowly rotate the base while looking through the access holes. When you come to the first mounting hole, mark it with a pencil, as in Fig. 8. Keep rotating the base until you've marked all the locations for the mounting screws.

Now, just remove the base and drill pilot holes in the top for the mounting screws. Then the top can be secured to the Lazy Susan with the screws, see Fig. 9 and tip in margin.

FEET. Before finishing the stand, I added four rubber, stick-on "feet" to the bottom of the base. These will prevent the stand from scratching up the top of a dresser or table. W

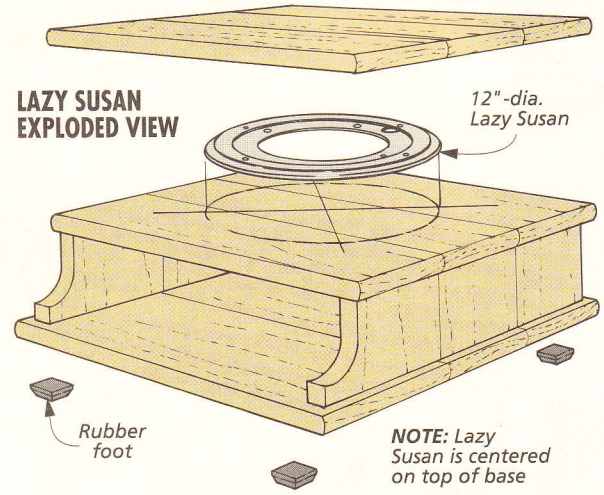

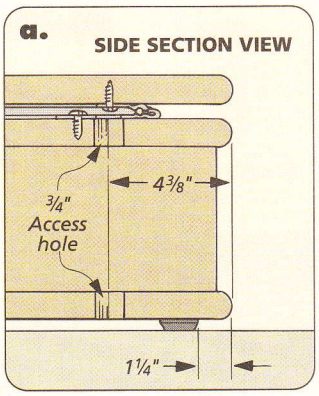

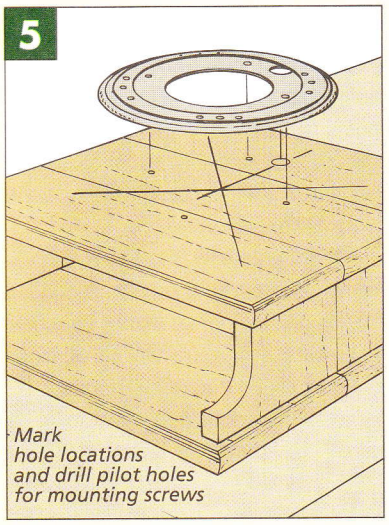

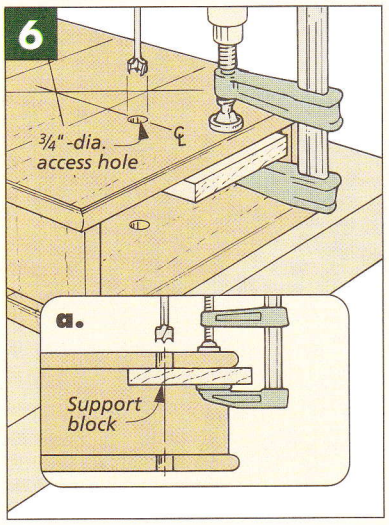

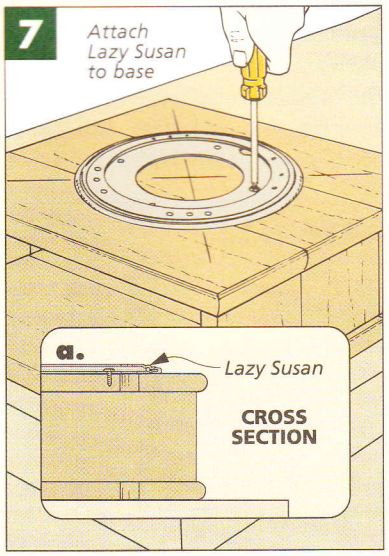

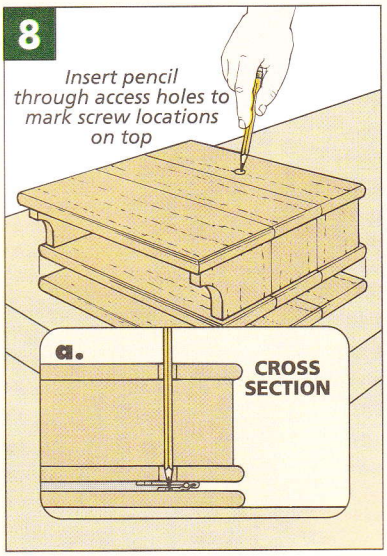

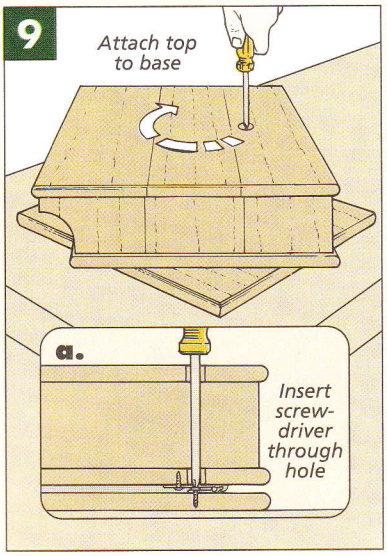

▲ *To hold the screws to your screwdriver while installing the Lazy Susan, try using a dab of glue from a glue stick.*

SCROLL-SAWN BOOKENDS

The scroll-sawn panels and brass plates make these bookends both attractive and functional.

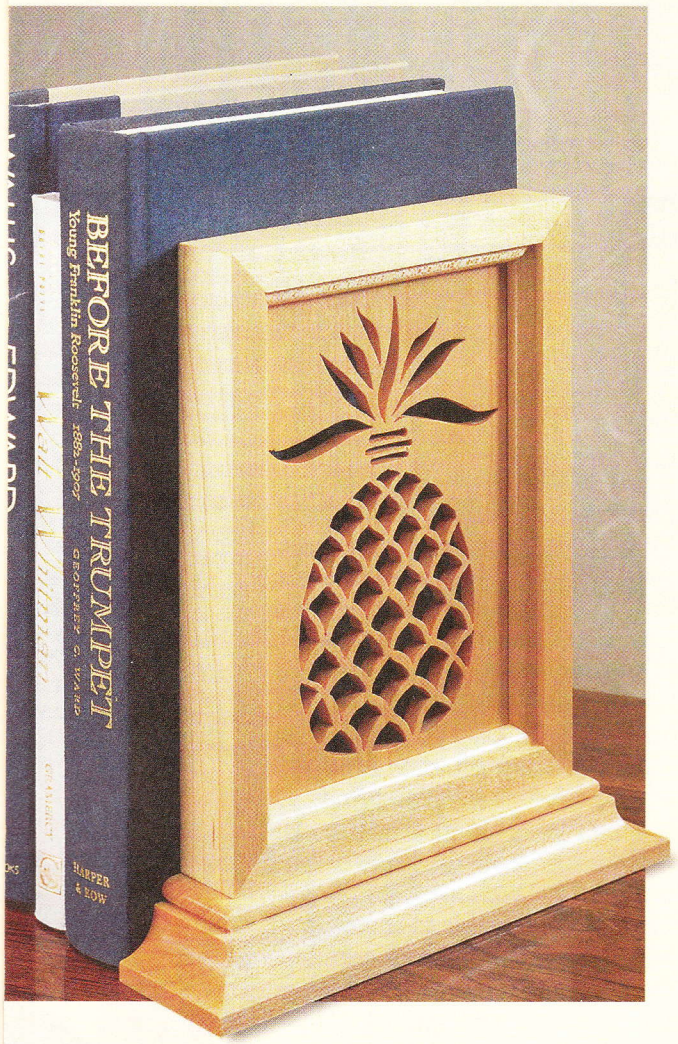

My good friend is an avid reader and a book collector, so this year, I decided to make him a pair of bookends. Not your plain, purely functional variety — I wanted something a bit more elegant. And for a change of pace, I also wanted to do a little work at the scroll saw.

My solution was to capture a scroll-sawn panel in a picture frame. This frame sits on a base with a rounded brass tongue on the bottom that sticks out and slides under the books.

When it came to designing the scroll saw patterns, I had a couple ideas but needed some help putting them on paper. (I'm not much of an artist.) So I asked Mike Mittermeier, one of our Senior Illustrators, if he would take a shot at turning my ideas into workable scroll saw patterns.

My first idea was a pineapple (a traditional symbol of hospitality). The other was less specific. I wanted a classic fretwork design. Mike did a great job with both patterns and even came up with one of his own — the stag, see photos. (Mike's an avid outdoorsman.)

But if you have some artistic talent, don't limit yourself to these ideas; come up with some of your own. And experiment with different woods too. We even backed up one of the scroll saw panels with a thin (30-gauge) sheet of brass. (Take a look at the article on page 24 for more on working with brass.)

BASE

As I mentioned earlier, each bookend is really just a picture frame that sits on top of a base, see Base Exploded View. I started with the base, which is two pieces of solid wood, plus a rounded brass plate.

MOLDING. The first piece to work on is the **base molding (A)**, see Base Exploded View. It's only 1/4" thick so you'll have to plane down some stock first. (If you don't have a thickness planer, you can resaw what you need on the table saw, see page 15.)

With 1/4"-thick stock in hand, you can cut the molding to rough size. I cut mine to finished length (6") but left it extra wide at this point (3 1/2"). This not only made the piece safer to work with, it also allowed me to cut two molding pieces from each blank. (Though there's only one of each bookend shown in the photos at left, I actually made them in pairs.)

Next, I rounded over the edges of the oversized blank with a 1/8" roundover bit, see Fig. 1. Since two pieces are being cut from this blank, all four

Pick a design (page 23), choose a favorite wood, and build your own unique bookend. And for a distinctive look, set a thin piece of brass behind the scroll saw panel.

MATERIALS

(For one bookend)

A	Base Molding (1)	1/4 x 1 1/4 - 6
B	Base Bottom (1)	3/4 x 1 7/8 - 7 1/4
C	Frame Ends (2)	3/4 x 1 - 5 1/2
D	Frame Sides (2)	3/4 x 1 - 7 1/4
E	Scroll Saw Panel (1)	1/4 x 4 1/2 - 6 1/4
F	Quarter Round (1)	1/4 x 1/4 - 28 In. in.

- (1) 16-Gauge Brass (4" x 5")
- (3) #8 x 1/2" Fh Brass Woodscrews

edges need to be routed, not just three. And I started with the ends first so there's less chance of chipout. Finally, I added an auxiliary top to my router table. It's just a piece of 1/4" hardboard with a smaller bit opening to give the base pieces extra support.

BOTTOM. After the molding pieces were ripped to width (1 1/4"), the next piece to make is the **base bottom (B)**, see Base Exploded View. This piece will end up a little bigger than the molding (1 7/8" x 7 1/4"). But it also starts out oversized, and two pieces will be cut from a single blank.

The first thing to do to the bottom blank is rout a cove with a 1/2" cove bit, see Fig. 2. Again, I routed the profile on all four edges of the blank and supported the workpiece with a square push block. Then the two bottom pieces can be ripped to finished width (1 7/8").

RECESS FOR BRASS PLATE. To keep the bookend (and books) from falling over, a brass plate is set into the bottom piece. So the next thing to do is rout the recess that holds the plate, see Fig. 3. The recess is about 1/16" deep, but the important thing is that it match the thickness of the brass.

To establish the size of the recess, I used an auxiliary fence with a couple stop blocks clamped on either side of a straight bit, see Fig. 3. With a 1/2"-dia. straight bit, you'll need to make a few passes between the blocks. And after routing, the round corners will need to be squared up with a chisel.

Gluing the molding to the bottom piece is pretty simple. The molding is centered side-to-side, see Base Exploded View. And the pieces should be flush along the back edge, see detail 'b' in Exploded View.

BRASS PLATE. The brass plate is cut to size next, and the process isn't much different from the woodworking you've already done. (For more on working with brass, see page 24.)

With the plate cut to size, I rounded the end with a hardboard template, a sabre saw, and a flush trim bit.

Finally, to soften the edge and make it easier to slide under the books, I routed a stopped chamfer around the curve. Then the plate can be screwed to the base, see detail 'a' above.

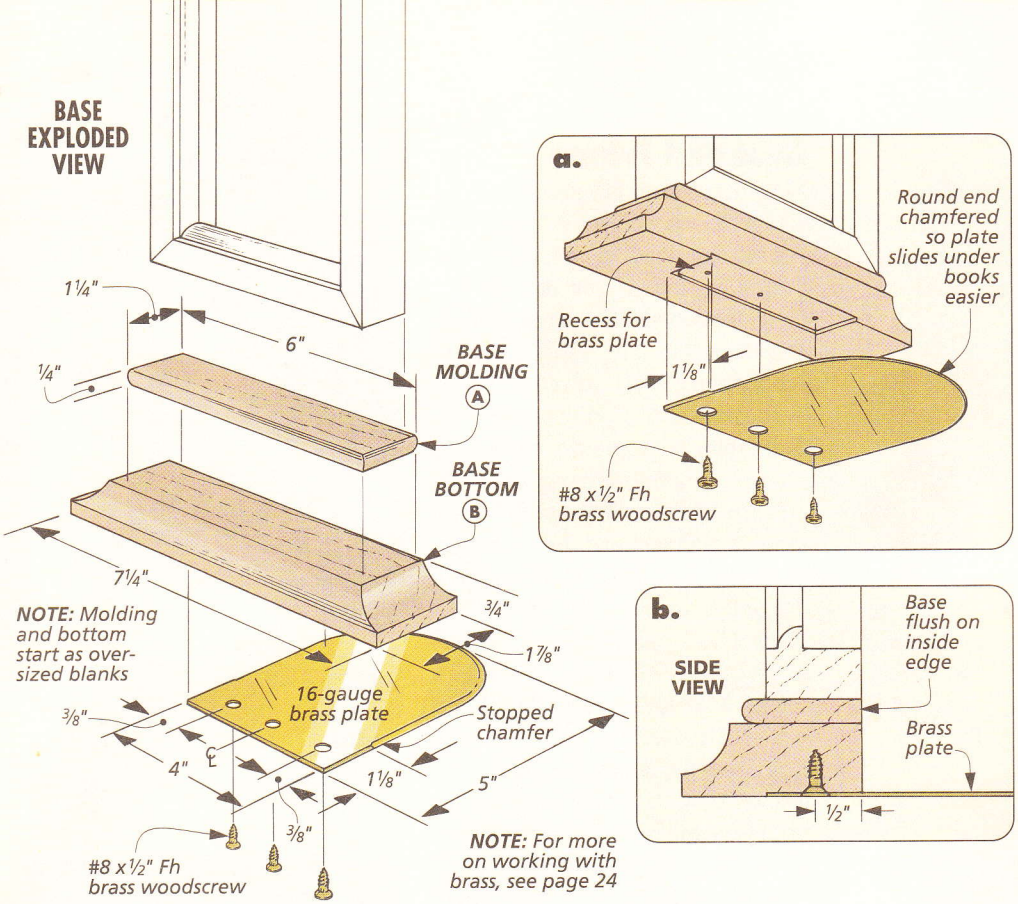

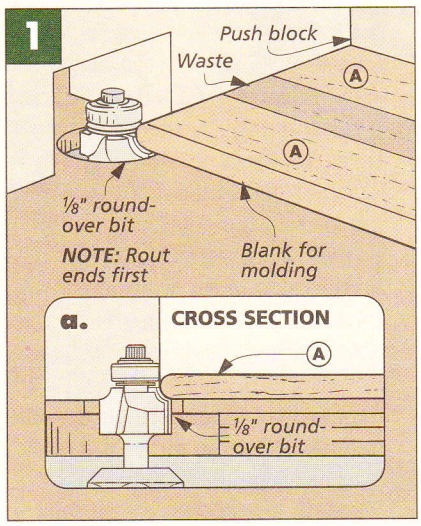

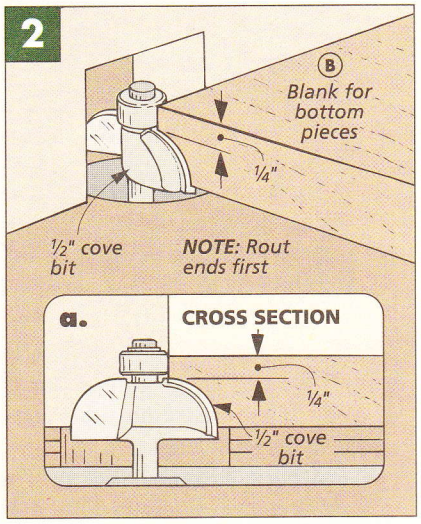

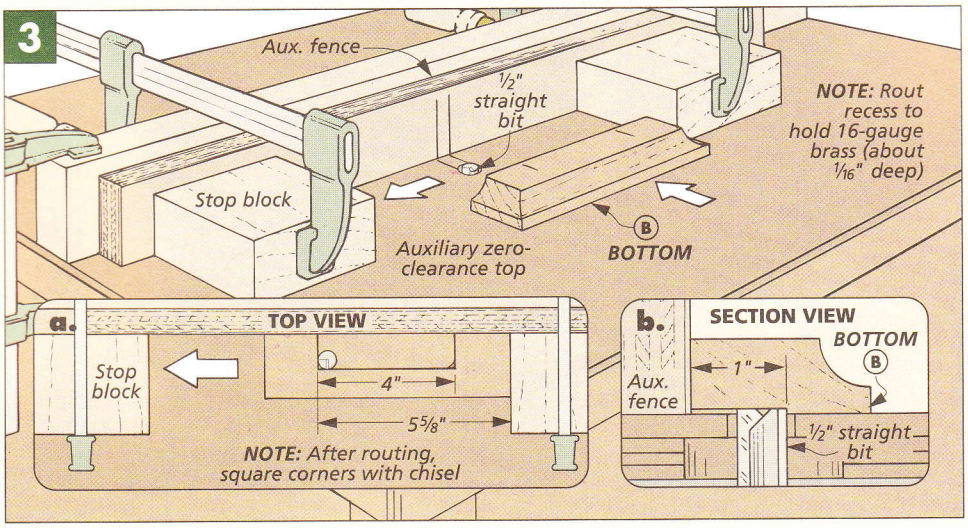

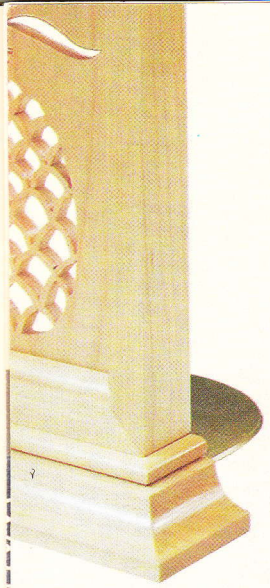

▲ *The frame and scroll-sawn panel are glued to the top of the base.*

Bookend Frame

Now that the base is built, all that's left is to build a small picture frame and a scroll saw panel to go inside it, see Frame Exploded View at right and Panel Exploded View on page 23.

FRAME BLANKS. The frame holds the scroll saw panel in the front with built-in roundover molding. Making the frame pieces is an easy three-step process: a roundover is routed, channels are cut to create the rabbets, and then the pieces are cut to width. However, like the pieces for the base, it's better to start with oversized blanks. So for each frame, I cut one blank from ¾"-thick stock (3" x 15").

ROUT ROUNDOVER. After the blanks were cut to size, I routed a ¼" roundover along the edges, see Fig. 4. This roundover has a shoulder, so the edge of the bit will need to be raised ⅛" above the table, see Fig. 4a.

RABBET. Behind the roundover, there will be a rabbet the scroll saw panel fits into. But to create the rabbet, two ¼"-deep channels need to be cut with a ¾"-wide dado set, see Figs. 5 and 5a. Then the pieces can be ripped to width (1"), see Fig. 6. Just position the rip fence so you end up with a ⅝"-wide rabbet, see Fig. 6a.

MITER PIECES. Now you can begin mitering these pieces to create the frame. I started with the **frame ends (C)**, see Frame Exploded View. They should end up ½" shorter than the base. Then the **frame sides (D)** can be mitered to length.

A word of caution, though. These frame pieces (especially the ends) are short. So be careful to keep your hands well away from the saw blade.

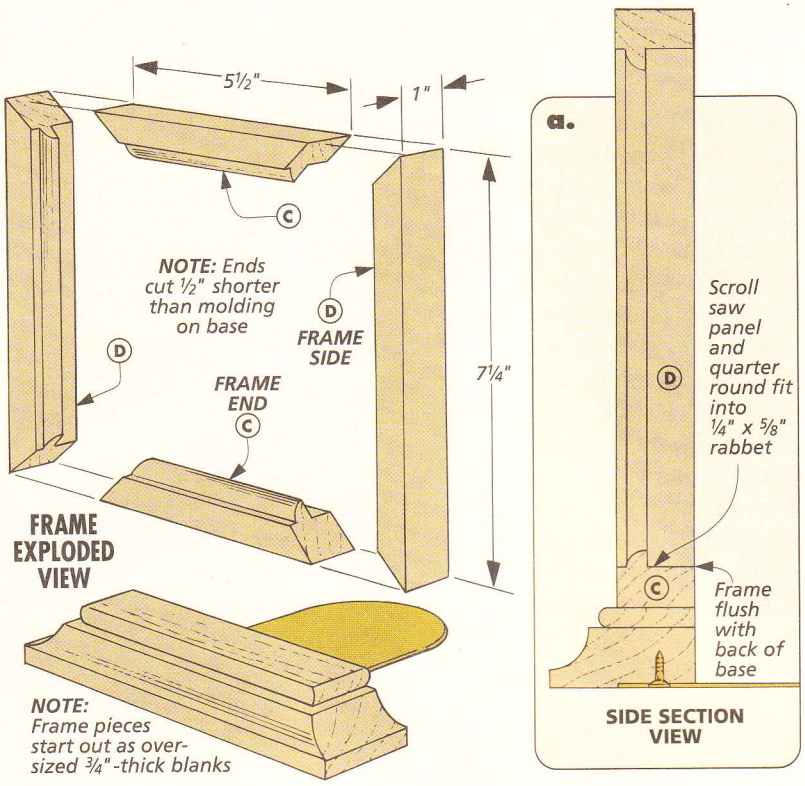

ASSEMBLY. With the pieces mitered, the frame can be assembled. Gluing four mitered pieces together at the same time can be a little tricky. So I typically glue up two corners first and then glue the two halves together.

When gluing the frame to the base, the inside edges should be flush. To do this, I laid the base back-side down on the edge of my workbench with the brass plate hanging off the edge. Then I glued the frame to the base, using hand pressure. (I didn't want to put any clamping pressure on the miter joints at the top or the roundover profile at the bottom.)

SCROLL SAW PANELS. At this point, you're ready to make the **scroll saw panels (E)**, see Panel Exploded View on page 23. These are ¼"-thick panels cut to fit in the rabbets.

The first thing to do is choose a pattern (see box) and enlarge it 200% on a photocopier. Then you can temporarily attach the photocopy to the panel with a spray mount adhesive.

Note: If you're making two panels with the same pattern, you can glue them together with the spray adhesive. This way, you'll only need to cut the pattern one time.

Now before the pattern can be cut out, you'll need to drill holes for blade access. (I drilled 1/16"-dia. holes in all the openings.) Then the waste sections can be cut away on the scroll

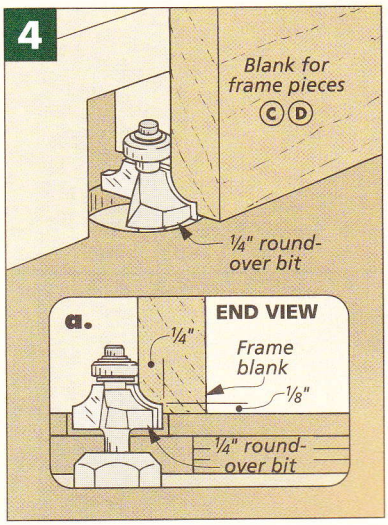

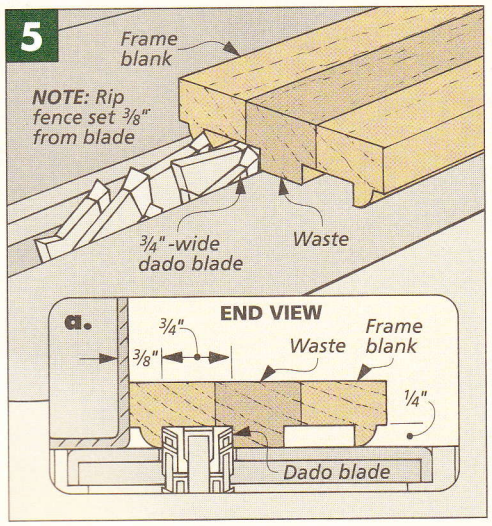

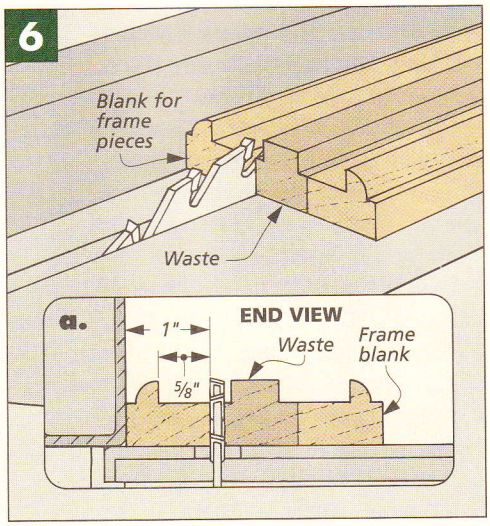

saw. To avoid weakening the panels, it's best to start with the smaller sections and save the larger ones for last.

QUARTER ROUND. To hold the scroll saw panel in the frame, I added small pieces of **quarter round (F)**. To make these safely, I start with an oversized blank, routing a 1/4" roundover on each edge, see Fig. 7.

Cutting the quarter round from the blank is a two-step process. First, I cut two kerfs on each edge with the fence set 1/4" from the blade, see Fig. 8. Second, the quarter round can be cut from the blank. However, you don't want to trap the small quarter round between the fence and the blade. So this time, reposition the fence so the quarter round falls to the waste side of the blade, see Fig. 9.

Finally, the quarter round can be mitered to fit in the frame, see Panel Exploded View. Then the pieces can be glued into the frame behind the scroll saw panel.

BRASS OPTION. Or for a different look, you can place a piece of 30-gauge brass between the scroll saw panel and the quarter round, see the photo in margin at right and the lower photo on page 20. W

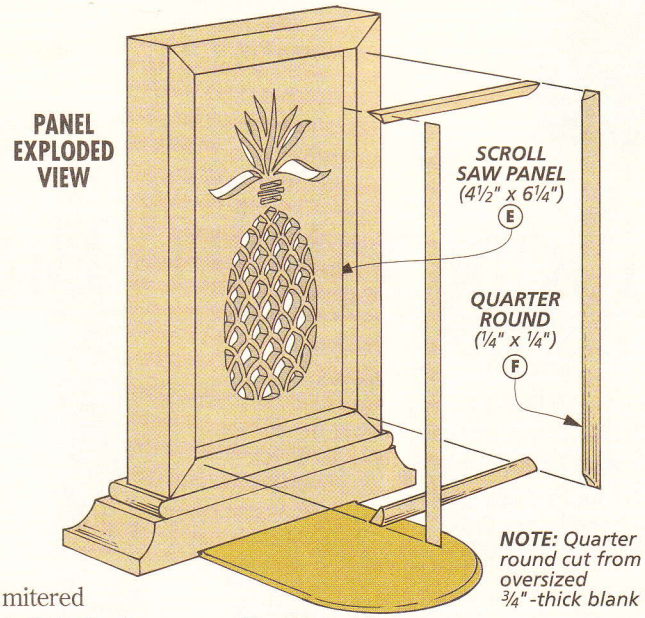

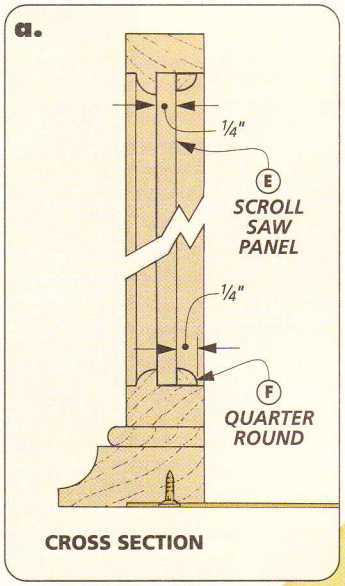

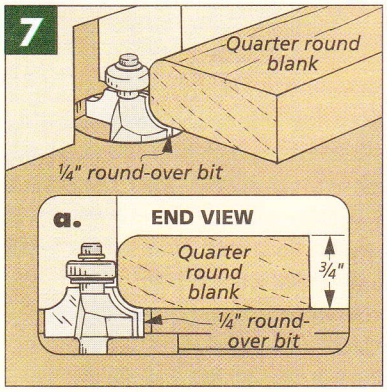

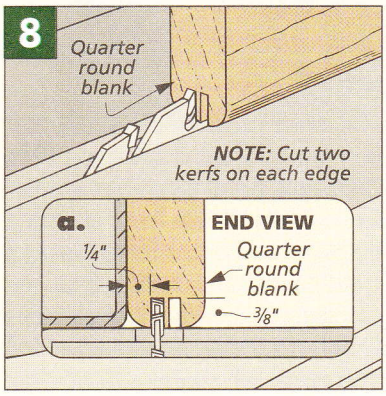

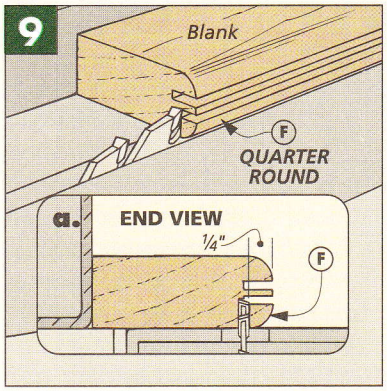

▲ *For a unique look, cut a piece of thin (30-gauge) brass to fit behind the scroll saw panel. For more on working with brass, see page 24.*

SCROLL SAW PATTERNS (Enlarge 200%)

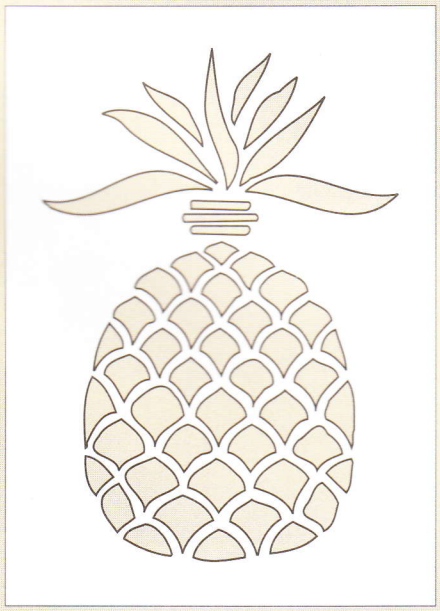

Pineapple

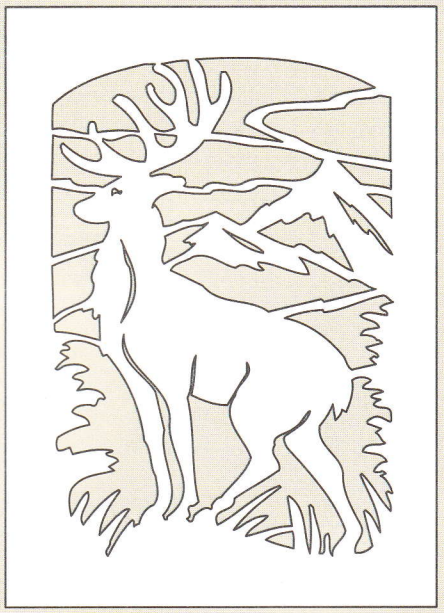

Stag

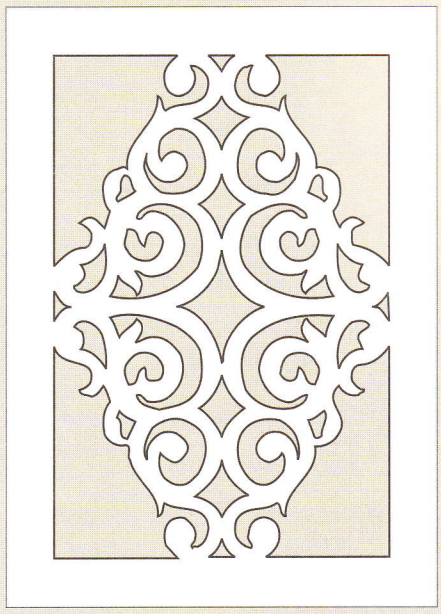

Classic scroll

WORKING WITH BRASS

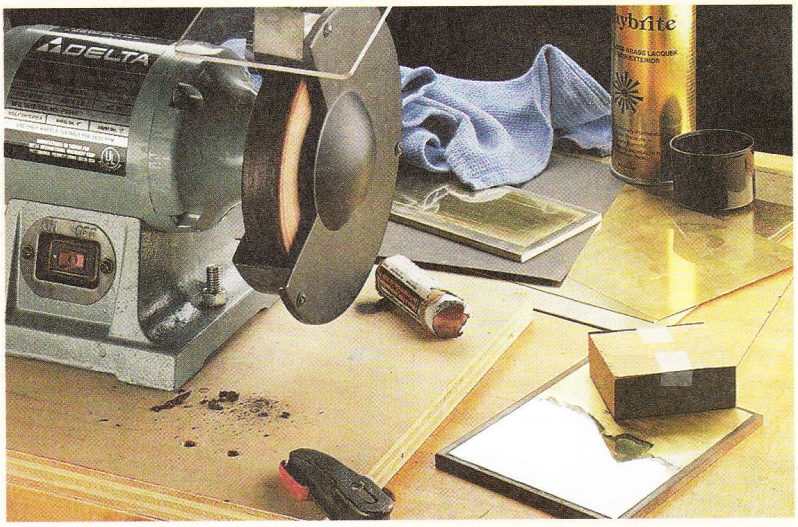

I'll admit, when cutting brass on the table saw for the first time, I was hesitant. It wasn't dangerous — my safety glasses were on, and a push block was in hand. But still, the *thought* of cutting metal was a bit scary. I half expected a shower of sparks or something equally dramatic.

I needn't have worried. Unlike iron or steel, brass is a "soft" metal, so it can be cut with any *carbide-tipped* tool, see margin photo. In fact, working with brass is very much like working with wood. (For sources, see page 35.)

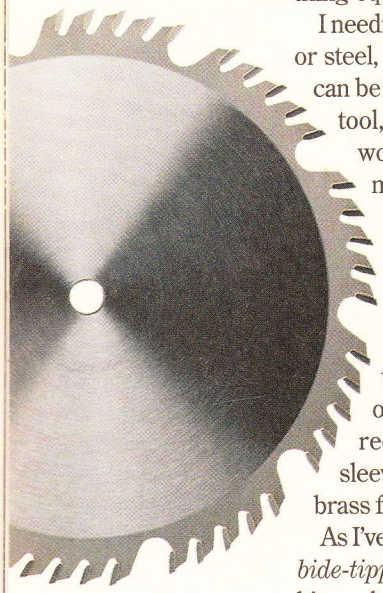

▲ *To cut or shape brass, all you need is a carbide-tipped saw blade (or router bit).*

STRAIGHT CUTS. The projects in this issue required small sheets of thin brass (16 and 30 gauge). And the first thing to do is cut them to size on the table saw. (For this, I'd recommend wearing a long sleeve shirt to stop tiny pieces of brass from peppering your arms).

As I've mentioned already, any *carbide-tipped* table saw blade or router bit can be used to cut or shape brass. But when it comes to the table saw, I'd recommend you sandwich the brass between two pieces of hardboard, see Figs. 1 and 1a.

I temporarily glued the brass to the bottom piece of hardboard with spray mount adhesive (though you can also use carpet tape). This makes the brass a bit easier to handle and prevents it from wedging under the fence. Plus, it will hold a real thin piece of brass flat, as it may want to "curl" up where the blade "pushes" up out of the table.

CURVED CUTS. Like straight cuts, you can also cut curves in brass. Either draw the curve or use a template and then cut it with a sabre saw, see Fig. 2. Here, you might want to buy a fine-toothed metal-cutting blade. It'll give you a smoother edge. But as with the table saw, you'll also need to support the piece. The up and down motion of the blade can bend the brass.

SMOOTHING CURVES. I'm not good enough with a sabre saw to cut a perfectly smooth curve. So I stay 1/16" from the line or template and then clean up the curve with a smooth mill file or drum sander (or a router, which I'll get to next). A drum sander will remove the material quickly, but you'll have better control with a file.

MULTIPLES. I ended up making several identical rounded plates for the bookends (page 20). So I created a hardboard template and used it to rough out each one with the sabre saw, see Fig. 2. And when smoothing the curves, I saved time by routing them using a flush trim bit, see Fig. 3.

Routing brass seems even stranger than cutting it with a table saw. But again, it's a lot like routing wood. The brass should be moved from right-to-

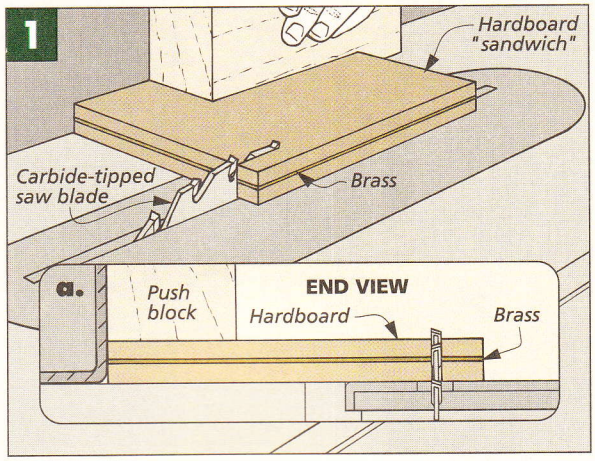

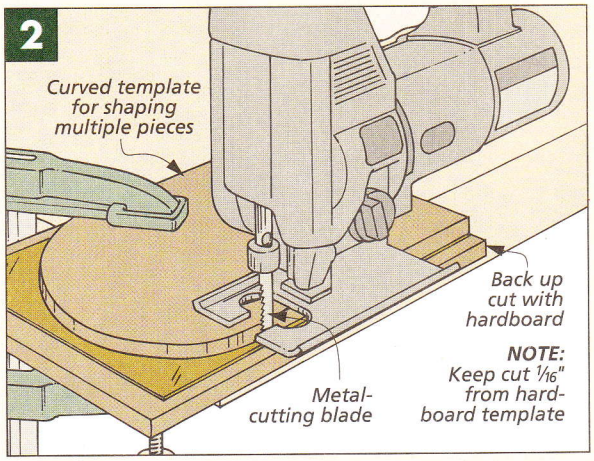

left across the table, and you'll want to take light passes, see Fig. 3.

Also, to make the plates easier to slide under the books (16 gauge brass is about 1/16" thick), I routed a stopped chamfer around the curve of the tongue, see Figs. 4 and 4a.

CLEANING THE ROUTED EDGE. The edges of the brass matched the template perfectly, but they weren't perfectly smooth. In fact, the edge looked a little like the chipout you get routing against the grain on a piece of wood.

To smooth out these edges, all I did was back rout the brass — move it in the opposite direction (from left to right), see Fig. 4. Typically, this is *not* a safe procedure, but I wasn't actually removing any material. It was more like burnishing the brass. (Just keep a good grip on the workpiece.)

ATTACHING BRASS. When it's time to attach brass to wood, I rely on woodscrews. I may use "instant" glue to hold the brass until the screws are added, but since wood expands and brass doesn't, I figure any glue bond is going to fail eventually.

DRILLING INTO BRASS. When drilling pilot holes in brass, I usually take an extra step. Since brass is so smooth, I prevent the twist bit from slipping by marking the center of the hole with an awl or punch, see Fig. 5.

To drill the hole, all you need is steady, even pressure. If you force the bit too much, on the back face of the brass you'll find a large "dimple" around the hole. (You may end up with a slight dimple anyway, but the larger the dimple, the more work you'll need to do with a file later.)

COUNTERSINKING BRASS. Like drilling, countersinking in brass isn't much different either. However, I've found a bit that will create clean, chatter-free cuts, see Fig. 6 and page 35.

But before you actually screw it in place, it's a good idea to first polish the brass so it "reflects well" on all your work, see box below.

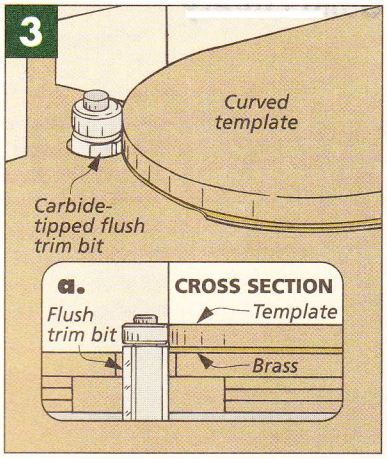

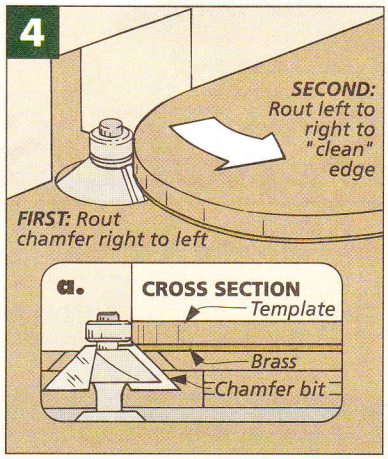

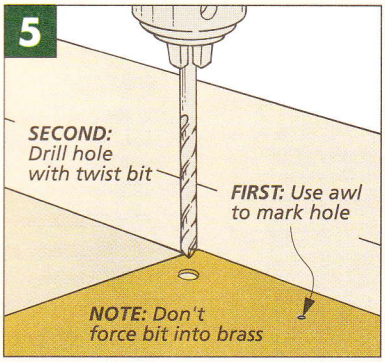

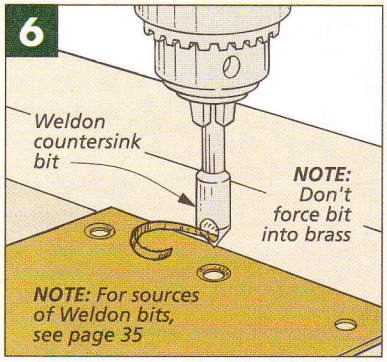

Brass will tarnish more slowly if you spray on a couple coats of lacquer.

BRINGING OUT THE LUSTER

Finishing brass requires sanding or polishing the brass finer and finer until it has the desired luster. But before you get started, take a second to mount the brass to a backer board with a spray mount adhesive. This will make it easier to secure to your bench and avoid fingerprints.

Typically, I sand brass starting at 320-grit, see left photo. But if there are deep scratches, you may need to start with 180 or 220-grit. For the projects in this issue, I sanded to 600-grit and then followed up with 0000 steel wool.

If you want a mirror-like finish, you can buff the brass with a "charged" buffing wheel, see center photo.

Finally, I'd recommend a polishing paste, see right photo. Then you can spray on a coat or two of lacquer to keep it from tarnishing too quickly.

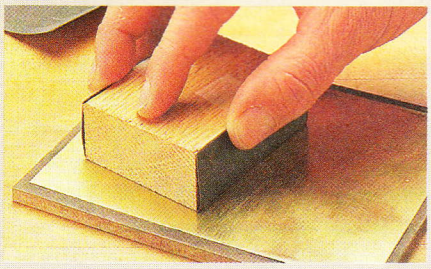

Sanding. *Sand up to 600-grit, sanding across the scratches left by the previous grit. Finish up with 0000 steel wool.*

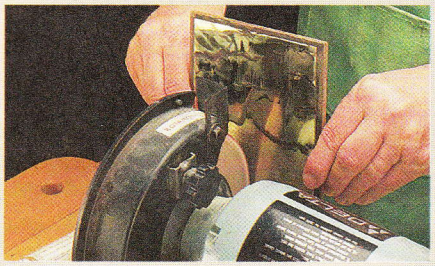

Buffing. *For a mirror-like shine, use a soft buffing wheel that's been "charged" with a polishing compound.*

Polishing. *Whether or not you buff the brass, the last step is to polish it with a lint-free cloth and a polishing paste.*

SCROLL-SAWN JEWELRY BOX

The elegant patterns on this box are first cut out with a scroll saw. Then the panel is glued to a backer board for a unique, almost-carved look.

Carved boxes always intrigue me. It's not what's inside — it's the small details and the craftsmanship that make them irresistible. Show me a carved box, and I just have to pick it up and give it a closer look.

When building this jewelry box, there are two scroll saw patterns from which to choose. The dove pattern is featured above, or, for a holiday theme, there are the poinsettias shown here.

I've always wanted to make a carved box, but there's been a hitch. I haven't done much carving. So when I set out to design this jewelry box, I tried to get around this by giving it the "look" of a carved box — without the carving.

The solution wasn't difficult. I created thin scroll-sawn panels for the sides of the box. These are backed up with solid panels. The end result doesn't look like a typical scroll saw project. It looks more like it's been carved.

SCROLL SAW DESIGNS. There are actually two different scroll saw designs you can choose for the box, refer to the Patterns on page 27. The jewelry box was initially designed with the dove patterns in the photo above.

Then someone mentioned that the box would make a great holiday project (to hold cards or candy). So there's also a poinsettia pattern with bells, see photo at left.

And if you really want to "brighten" the scroll saw pattern, you can back it up with brass instead of wood, see the box on page 29. This requires only a minor modification, and we'll show you how to work with brass in the article on page 24.

Construction Details

OVERALL DIMENSIONS:
10½"W x 7½"D x 5½"H

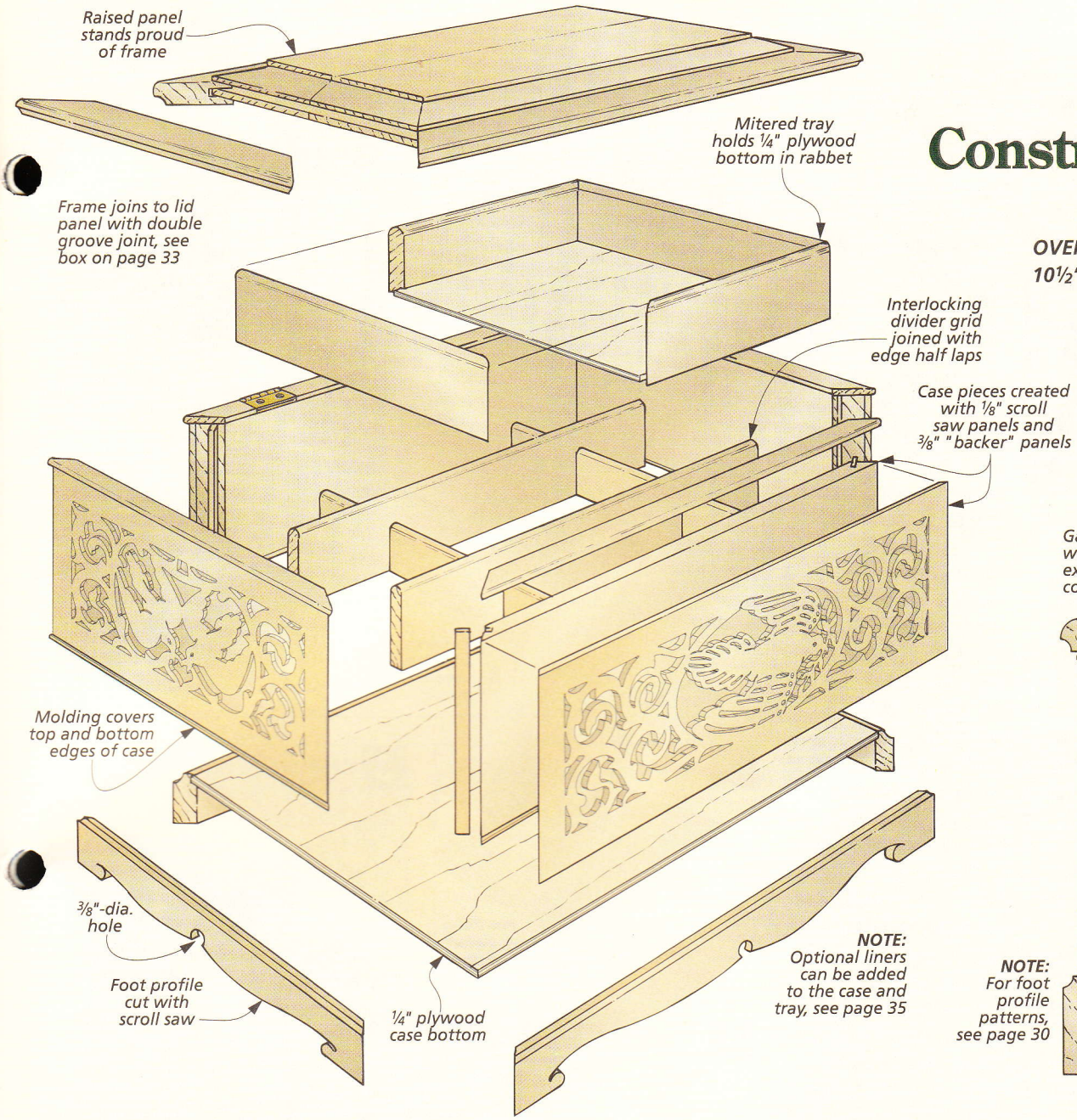

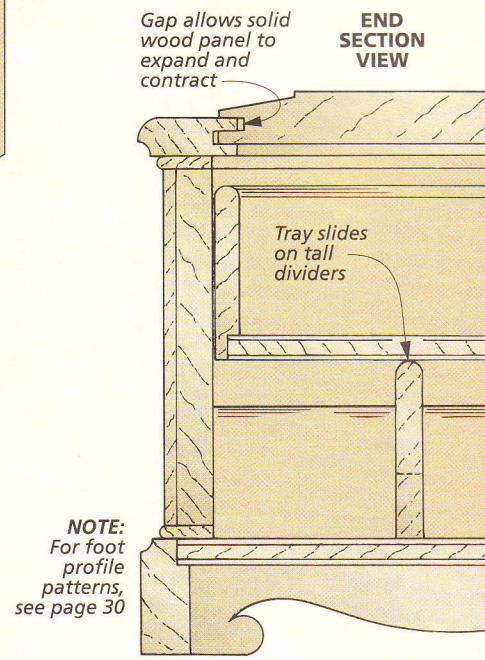

SCROLL SAW PATTERNS (Enlarge 250%)

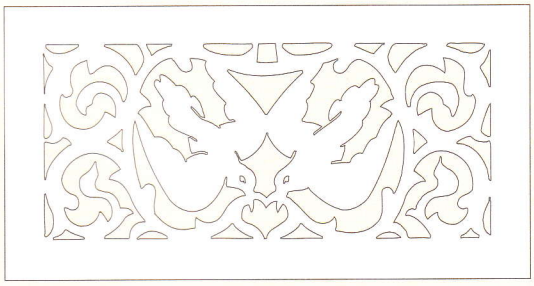

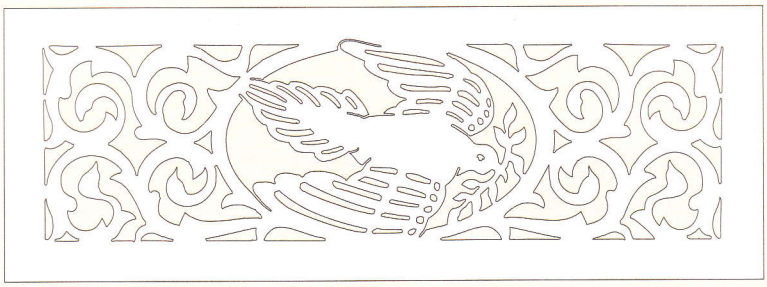

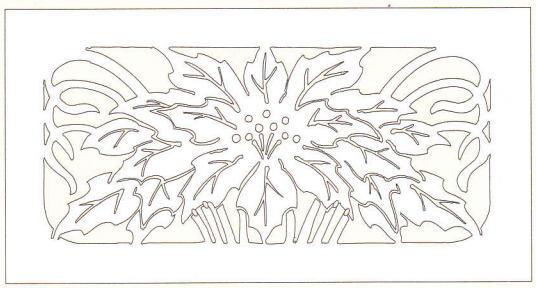

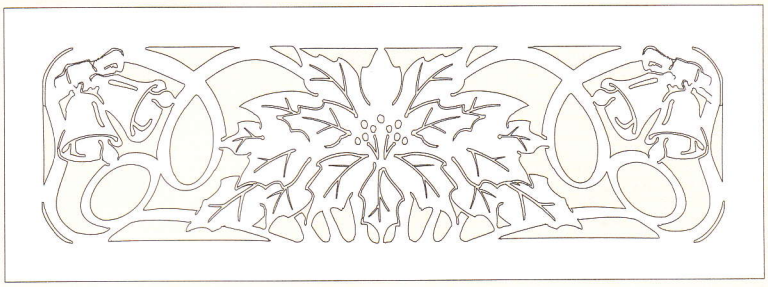

Case

For this jewelry box, I started with the pieces that attract the most attention: the scroll-sawn panels, see Case Exploded View at right.

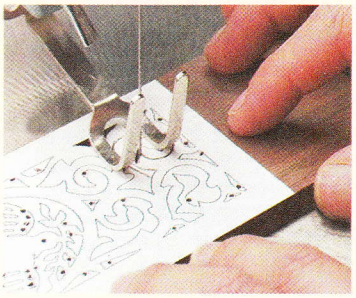

▲ *Before cutting the scroll saw designs, the patterns are temporarily glued to the pieces and some access holes are drilled.*

SCROLL PANELS. To make the panels, you'll need to plane or resaw some stock down to 1/8" thick. (There's more on resawing stock on page 15.) Then the **front/back (A)** and **end (B) scroll panels** can be ripped 3½" wide and cut to rough length (12" and 9").

To create full-sized patterns for the panels, you'll need to enlarge the patterns on page 27 to 250%. If your copier won't enlarge this much, you can first enlarge them 200% and then a second time at 125%.

When attaching the patterns to the blanks, I used a spray mount adhesive because it's quick and clean (but rubber cement will also work), see Fig. 1. Also, to cut my scroll sawing time in half, I glued the panels together (with spray mount adhesive) so each pattern only had to be cut once.

Before pulling up a chair to the scroll saw, you'll first need to drill starter holes (1/16"-dia.) in each inside section for blade access, see Fig. 1a and margin photo above. And when cutting away the pattern, start with the small openings, leaving the largest ones for last. Then brush a little paint thinner along the joint line of the panels and gently pry them apart.

BACK-UP PANELS. The scroll panels are complete now, but I wanted to back

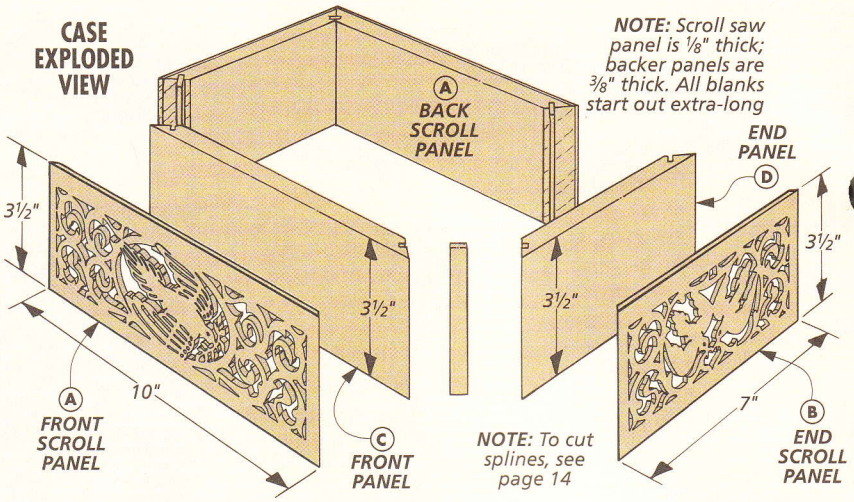

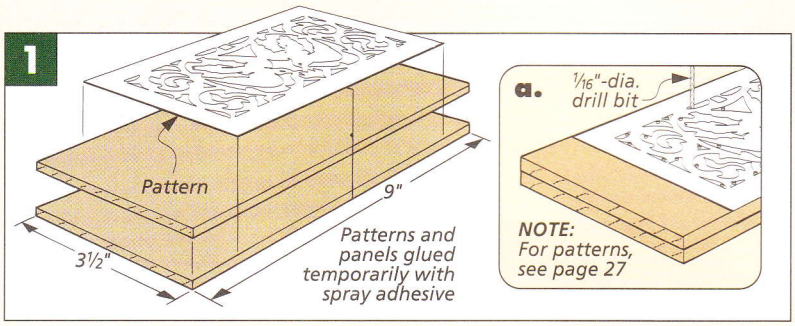

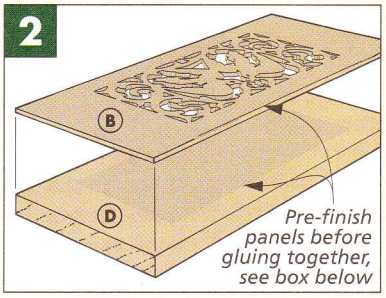

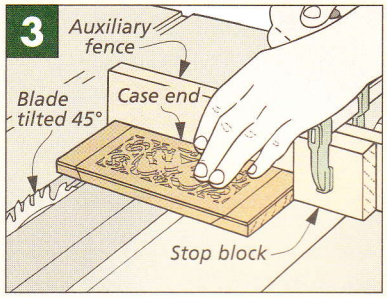

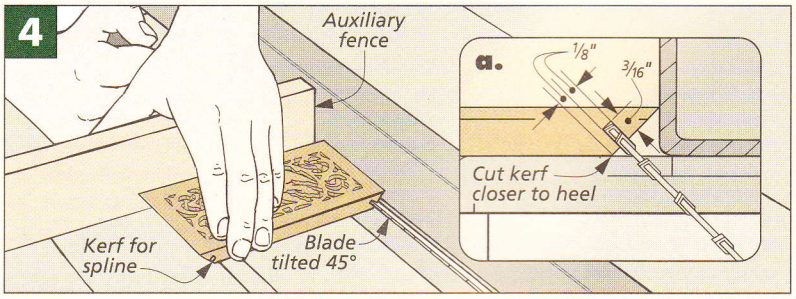

PRE-FINISHING SCROLL-SAWN PANELS

Because the scroll-sawn panels were going to be backed up by another panel, I was concerned that too much finish would "puddle" in the cutouts. So I finished all the panels *before* they were glued together. (I used a wipe-on finish to keep things simple.)

However, you don't want finish on the areas where you need to apply glue. So first, tape off these edges on the *inside* face of the scroll-sawn panels (A, B) and the *outside* face of the backer panels (C, D), see left photo. After the finish dries, carefully remove the tape and glue the panels together, see right photo and Fig. 2 above.

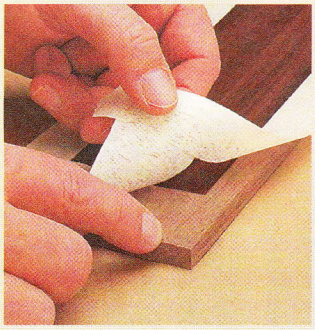

them up (plus I wanted the case sides thicker than 1/8"). So I cut **front/back (C)** and **end (D) panels** from 3/8"-thick stock to the same rough size as the scroll panels, see Fig. 2.

However, before gluing the panels together, I applied a couple coats of finish, see box on page 28. This is a bit unusual, but I've finished enough scroll-sawn panels to know that it'd be easy to get *too much* finish in the tiny openings (unless you painted on the finish with a small brush).

With the pre-finishing done, each scroll and backing panel can be glued together, see Fig. 2. Then they can be mitered to final length, see Fig. 3.

To strengthen these miters, I added hardwood splines. Cutting the kerfs that hold them isn't any trouble, see Fig. 4. But when cutting the splines, you need to make sure their grain direction is correct, see page 14.

With the splines cut, the case can be glued together. As with any project, if it goes together square, the rest of the project will go that much easier. (In fact, you may want to cut a spacer to set inside as a kind of form.)

MOLDING. At this point, the faces of the case look great, but the joint lines and splines on the edges are visible. So I added 1/8"-thick **front/back (E)** and **end (F) molding** to the edges, see Molding Exploded View.

These pieces should end up the same thickness and width as the hinges used on the lid later (1/8" x 9/16"), but the roundover on the molding is easier to make if the blanks start out extra wide, see Fig. 5.

To round over the edge of the molding, I used a 1/16" round-over bit, see Fig. 5. But if you don't have this bit, don't worry. You can simply knock off the edges with a block plane and then sand the roundover by hand.

Now the molding pieces can be ripped to width (9/16"), see Fig. 6. Then you can miter them to length and glue them to the box flush with the inside edges, see Molding Exploded View and detail 'a.' However, don't glue *all* the pieces in place at this point. The top back molding is mitered to length now, but it won't be glued in place until *after* the hinges (and lid) are attached later, refer to page 33.

BRASS OPTION

As soon as she saw the jewelry box, Jeanne, our receptionist, suggested that we put a piece of brass behind the scroll work just like we did with one of the bookends (see page 20). I agreed. The brass would really highlight the scroll saw design and make the box a kind of "jewel" in itself.

In order to slide a piece of brass behind the scroll work, a shallow channel has to be cut in the backing panels (C, D), see Fig. 1. But this isn't difficult to do. A straight bit in a table-mounted router will create a clean, smooth channel. Just set the bit a fraction higher than the thickness of the 30-gauge brass.

After routing the channel, cut a brass sheet to fit inside and polish it up, see page 24. But don't slide the brass into place until you're ready to glue the case together, see Fig. 2.

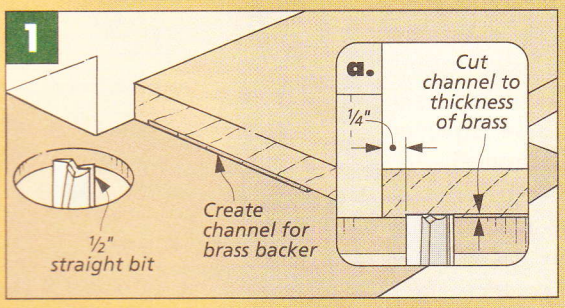

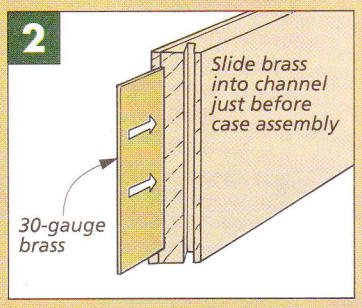

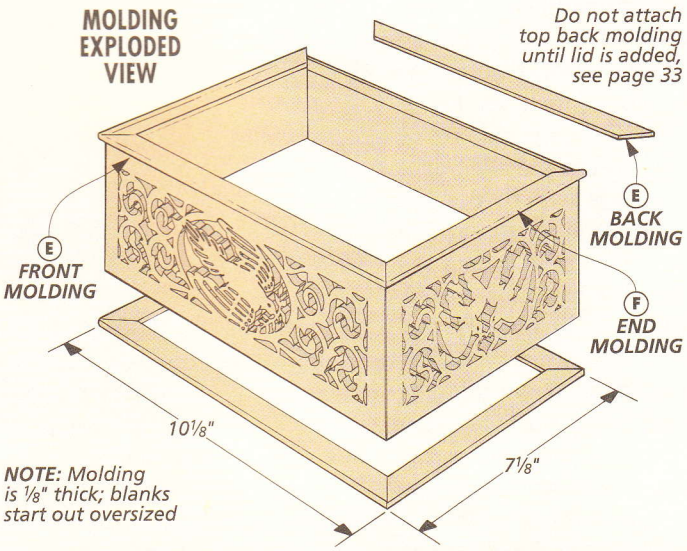

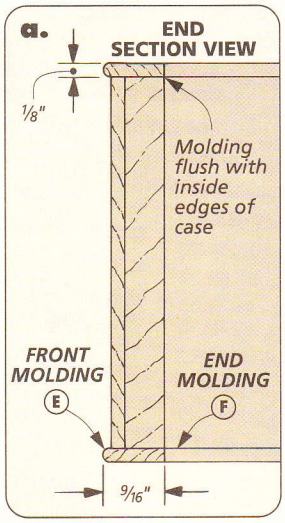

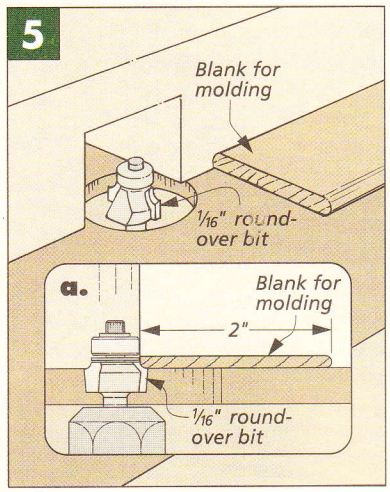

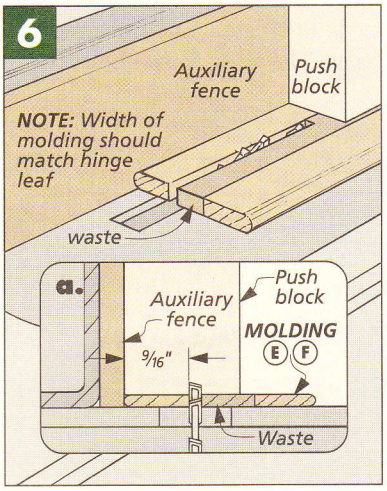

Base

The case is complete now, but it still doesn't have a bottom. So the next section to work on is the base, see Base Exploded View. With all the scroll work on the sides of the case, it seemed like the base should have a few curves as well. So I added a foot profile with a graceful curve.

BASE BLANKS. The base pieces are cut from ½"-thick stock, see detail 'a' at right. I ripped the base **front/back (G)** and **ends (H)** to finished width (1⅛") but left them extra long while I did a little work at the router table.

When the base is assembled later, a small rabbet on the inside edges of the base pieces will hold a ¼" plywood bottom, see Base Exploded View. So I routed a ⅛"-deep rabbet on each base piece to hold the plywood, see detail 'a.'

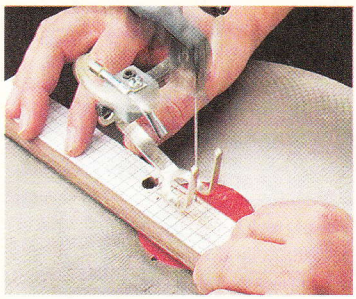

▲ *Drilling the circular opening in the center of each base piece first will make it easier to cut the curves with the scroll saw.*

On the outside edges, I routed a ⅛"-rad. cove. You may not have a cove bit this small, but a ¼"-dia. core box bit will also do the trick, see Fig. 7. (The only difference between the two router bits is that a cove bit has a bearing on top, while a core box bit doesn't.)

After the coves have been routed, the base pieces can be mitered to final length, see Base Exploded View. They should end up ⅜" longer than the molding on the edges of the case.

When the base pieces are cut to final length, you can start on the profiles that create the "feet" on the bottom edges. As before, the first thing to do is create some full-sized patterns. The ones shown below need to be enlarged 200%. Then you can mount them to the base pieces the same way you mounted the scroll saw patterns earlier. (Again, I used spray mount adhesive to do this.)

Most of the decorative profile on the base pieces will be cut with the scroll saw, see margin photo. But there's a circular opening in the center, and I drilled this hole first with a ⅜"-dia. bit, see detail 'b.' (A Forstner or brad point bit will work best.) Drilling this hole ensures the opening will be perfectly round *and* will make the curves a little easier to cut.

After the profile has been cut and sanded smooth, the base is about ready to be assembled. All you need to do is cut a ¼" plywood **bottom panel (I)** to fit the rabbets, see Base Exploded View. This will keep the base square and strong, so the miters don't need splines (unlike the case).

With the base glued together, it can be glued to the case. Just make sure the two are centered evenly.

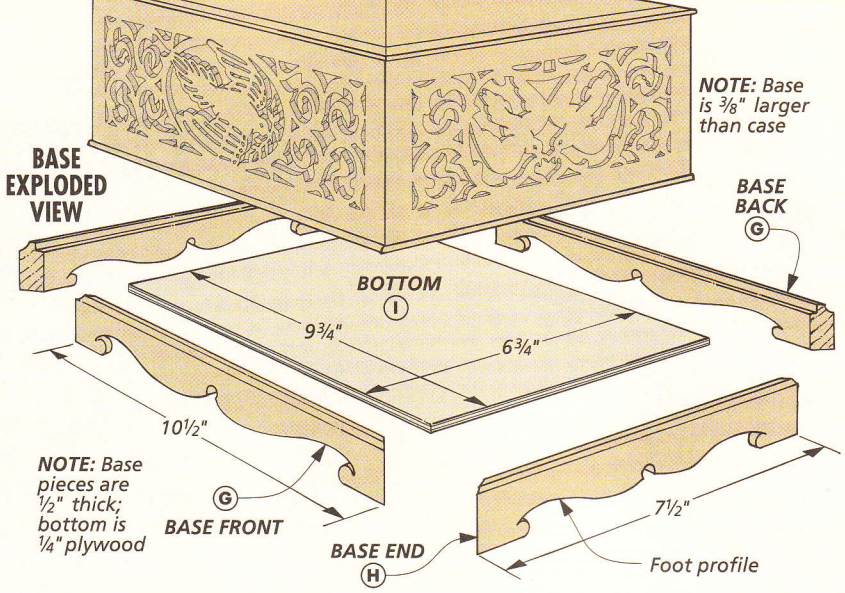

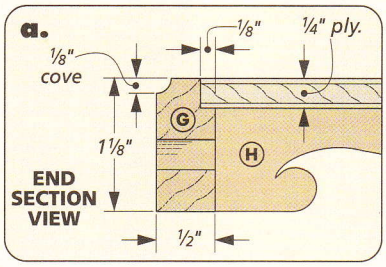

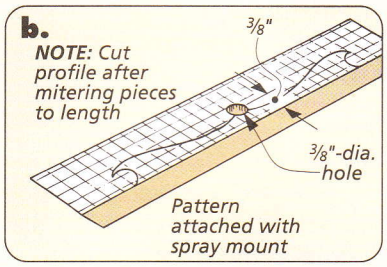

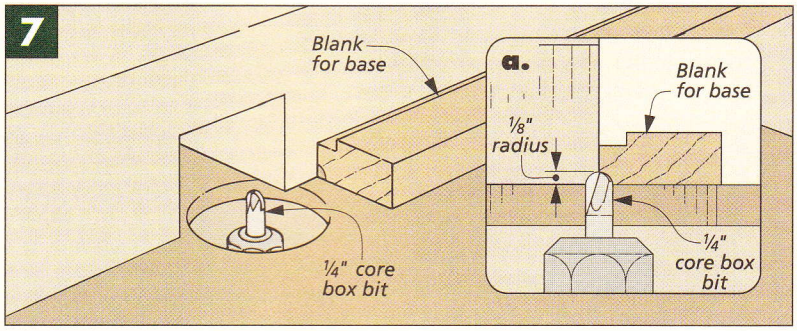

BASE END PATTERN

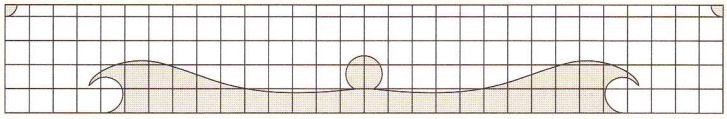

BASE FRONT/BACK PATTERN

NOTE: One square equals ¼". Enlarge patterns 200%

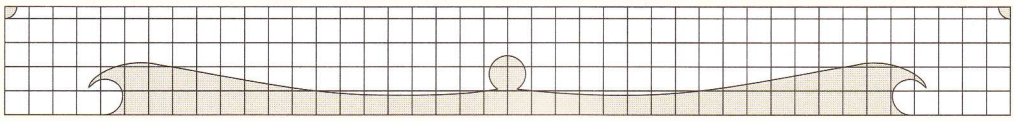

Dividers & Tray

As I mentioned earlier, this box could be made into a holiday box for cards or candy. But for the jewelry box, I added a divider grid to keep the jewelry organized, see Divider Exploded View. And I also added a tray to slide along the top of the divider, see Tray Exploded View below.

GRID. The divider grid consists of four 1/4"-thick workpieces that interlock with edge half laps, see Divider Exploded View.

What's a little unusual is that the four pieces aren't the same height. The **long dividers (J)** are taller than the **short dividers (K)**, see detail 'a.' This way, when the tray is set on top of the long dividers later, it will slide smoothly back and forth — the short dividers won't get in the way.

After the dividers were cut to size, I cut two notches in each one, see Fig. 8. The width of the notches equals the thickness of the pieces (1/4"), see Fig. 8a. And the depth is half the height (width) of the *short* dividers.

Before the dividers are assembled, the last thing to do is round over their top edges, see Figs. 9 and 9a. Then a drop of glue can be applied to the shoulders of the notches, and the grids can be glued together.

TRAY. In addition to the dividers, I also built a small tray to fit in the case, see Tray Exploded View below right. It slides back and forth along the two long dividers, see detail 'a.'

I made my tray 1 3/4"-tall, but the important thing is to size the pieces to allow a little clearance above the tray when it's set on the dividers, see detail 'a.' (This will give you room to add an optional satin liner under the dividers later.) The **tray front/back (L)** are mitered 4 1/2" long. The **tray ends (M)** can be mitered to fit between the front and back of the case. (Mine were 6" long.)

Like the dividers, the top edges of the tray feature a simple roundover. And when that's routed, a 1/8"-deep rabbet can be cut along the bottom inside edges to hold a 1/4" plywood (or hardwood) bottom. Then after the **bottom panel (N)** is cut to size, the tray can be glued together, and you can move on to the lid.

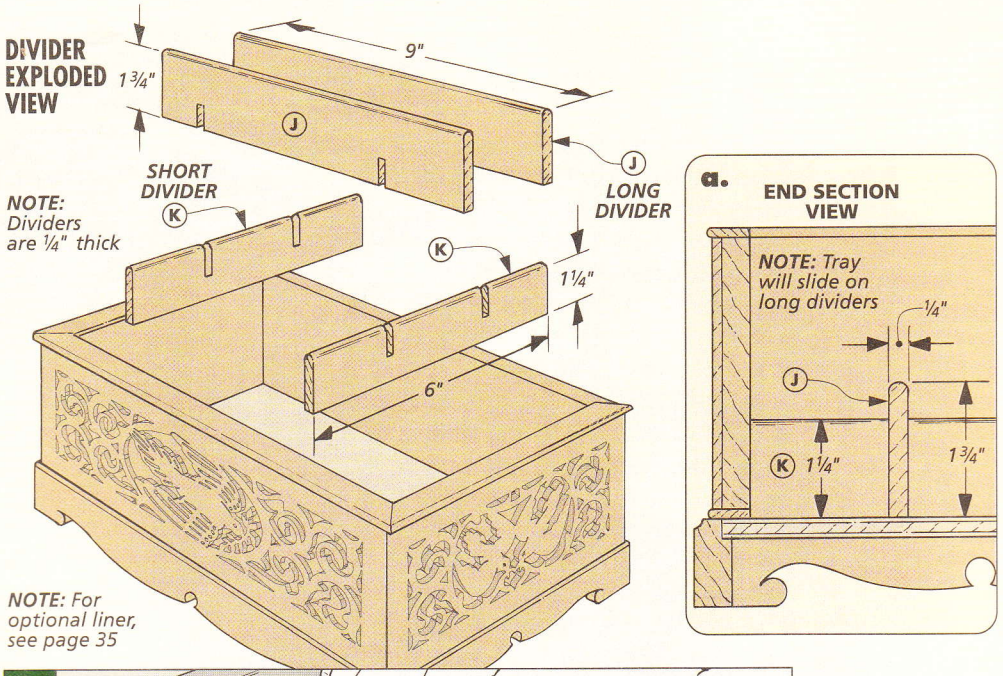

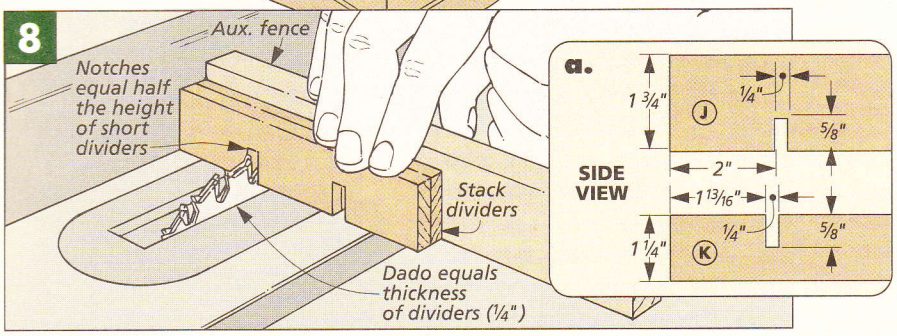

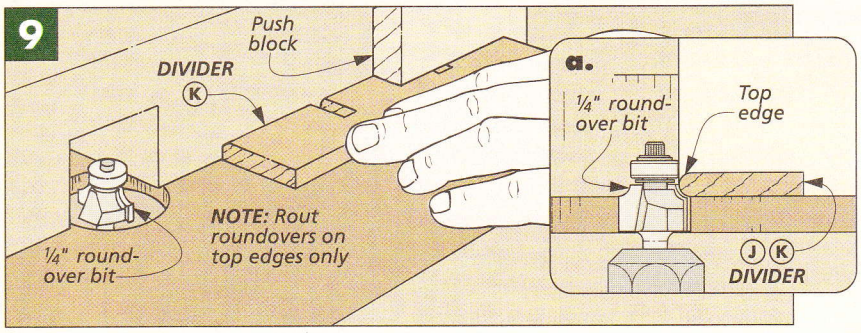

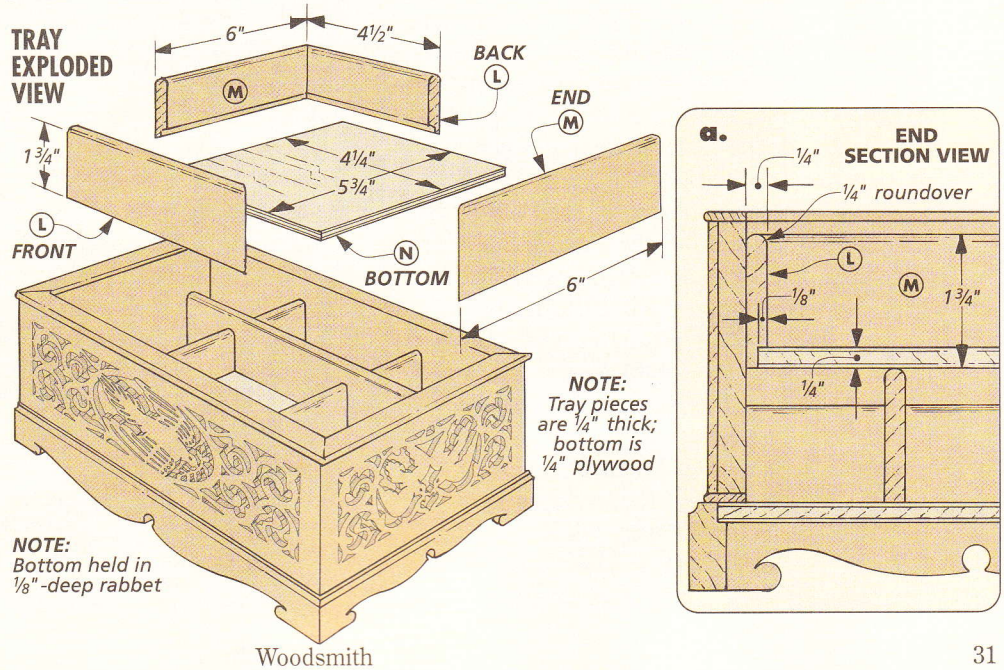

Lid

Other than a few finishing touches, the only thing left to build is the lid, see Lid Exploded View. The lid is a frame and panel assembly, but what's a little unusual is that the raised panel stands proud of the frame, so it requires different joinery, see details 'a' and 'b.' (More on that later.)

LID FRAME. To begin, I ripped some 3/8"-thick stock 1" wide for the **lid frame front/back (O)** and **ends (P)**, see detail 'a' at right.

But before mitering the frame pieces to length, I routed the profiles on the outside edges. First, I routed a 1/4" roundover on the top, outside edges, see Fig. 10. Then to create a slight finger grip along the bottom edge, I routed a 1/8" cove, see Fig. 11.

After these profiles have been routed, the frame pieces can be mitered to finished length, see Lid Exploded View. And like the base, these pieces are cut 3/8" longer than the case molding, see detail 'b' above.

LID PANEL. Before you can complete the lid frame, you'll need to cut the **lid panel (Q)** to finished size from 1/2"-thick stock, see Lid Exploded View. To do this, dry assemble the frame and measure the opening. The panel should be cut 3/8" larger than this opening. (Mine was 5 7/8" x 8 7/8".)

DOUBLE GROOVE JOINT. With the panel cut to size, the next thing to do is cut the double groove joint that locks them together. This is a simple procedure and only requires one setup, see the box on page 33. But the setup has to be done carefully, so you'll need a couple test pieces. (Make them 1/2" thick so you can also use them to set up the cut for the raised field.)

RAISED FIELD. The frame pieces are now complete. All that's left on the lid is to create the raised field, see Fig. 12. Here, the test pieces used earlier will come in handy. Tilt the saw blade 9°, raise it 3/4", and add a tall auxiliary fence for support, see Fig. 12a. Sneak up on the position of the fence until the shoulder above the groove is 1/16". (The shoulder of the raised field should also be close to 1/16".)

When the fence is set, you can cut the bevels on the lid panel, see Fig. 12. (You may also need to clean up the

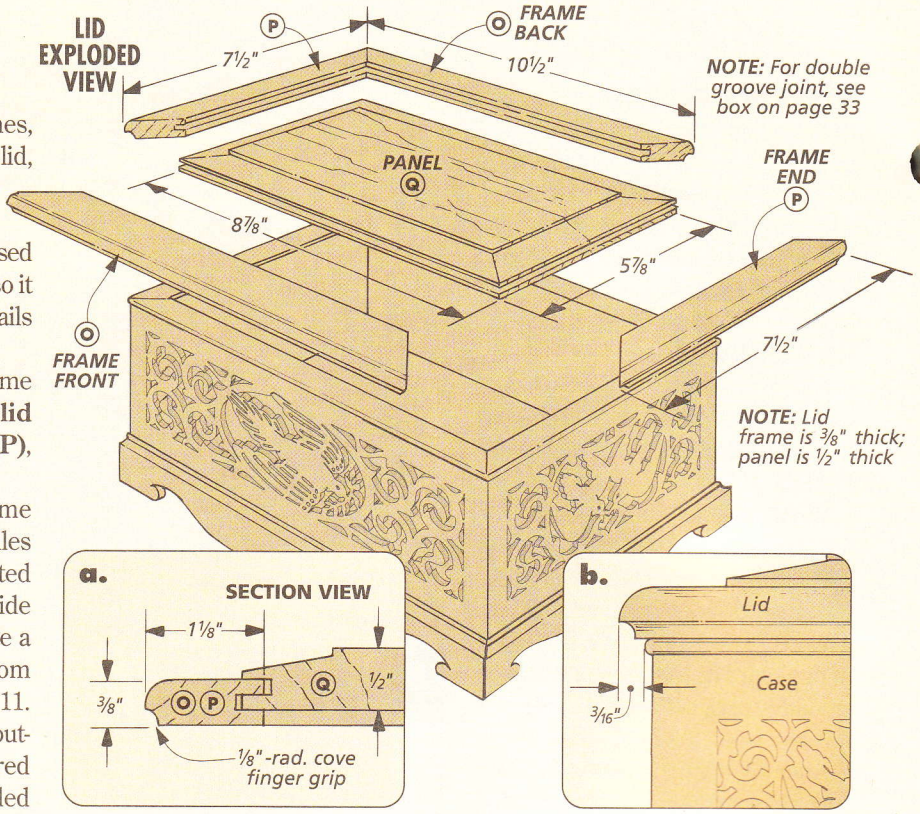

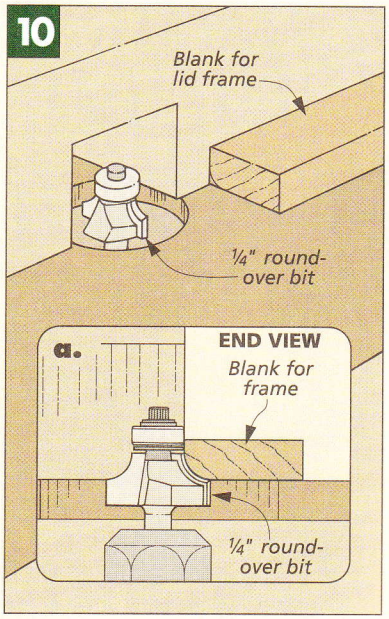

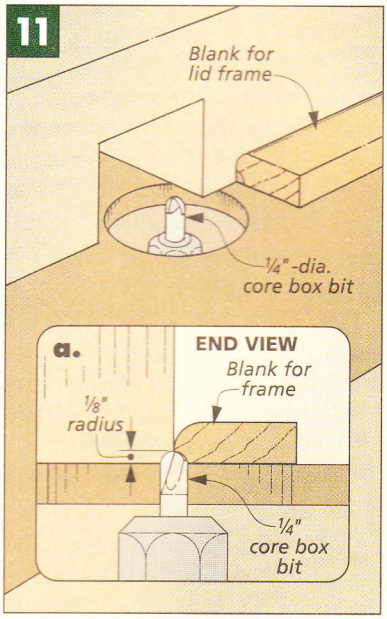

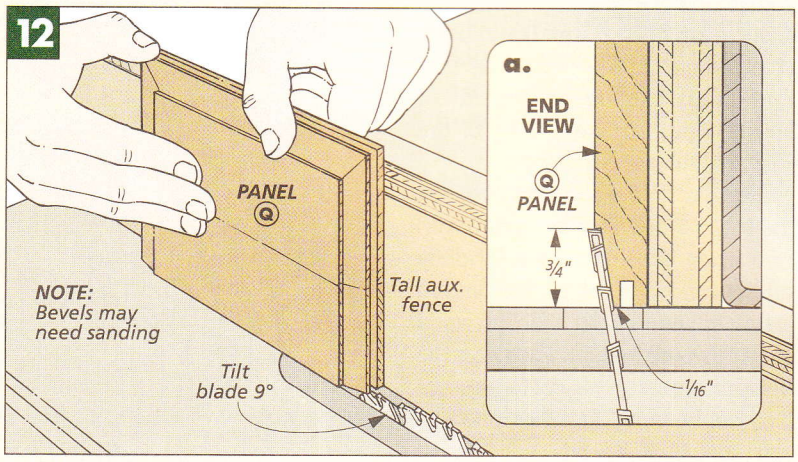

bevel with sandpaper if the saw blade leaves swirl marks.)

LID ASSEMBLY. Now you can glue the frame around the panel. Getting four mitered frame pieces glued up around a panel (without getting any glue in the grooves) can be a trick. So to make the procedure less hectic, I glued up the two corners of the frame first. Then I glued the two halves around the panel. And to hold the panel in place, put a drop of glue in the grooves at the center of each *end* piece only, see Lid Exploded View.

ATTACH TO CASE. At this point, both the lid and case are complete, so they can be put together. This lid is easier than most to attach because you don't have to cut any hinge mortises. The top, back molding (E) that wasn't glued in place earlier will take care of this (refer to page 29). I cut the mitered ends of this piece 1½" long and glued them in place, see Fig. 13.

Now the hinges can be screwed to the case next to the molding, see Fig. 13. Then center the lid on top of the case so you can mark the position of the hinges on the lid, see Fig. 13b.

After you've got the hinges screwed to both the lid and the case, you still need to remove the lid one more time. This way, you can fill in the gap between the hinges with the leftover piece of molding, see Fig. 14. And before reattaching the lid, it's a good idea to go ahead and apply the finish to the case and lid first, see page 35.

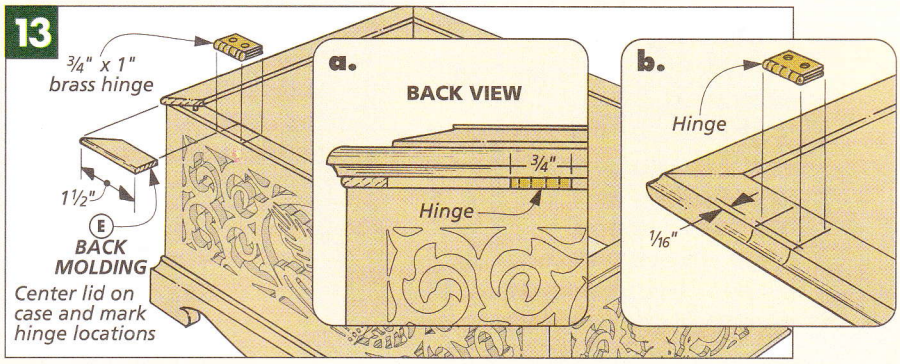

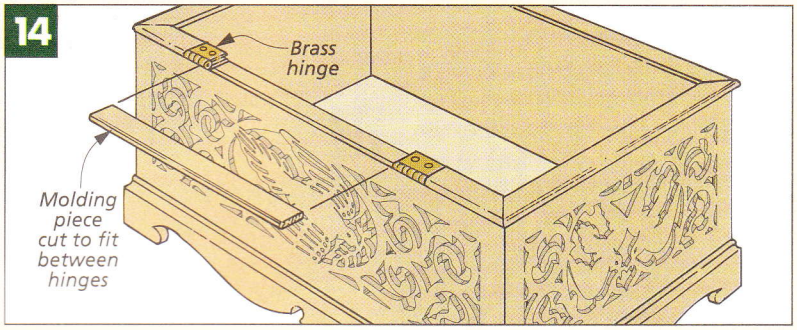

DOUBLE GROOVE FRAME & PANEL JOINT

In the lid of this jewelry box, the panel is a solid wood piece that's raised above the face of the frame. This means the frame and panel have to be joined in a way that allows the panel to expand and contract with changes in humidity.

To do this, I used an interlocking double groove joint. It's made by cutting grooves in both the frame pieces and the panel. The grooves are positioned to leave tongues that fit in the opposing grooves. By cutting this joint near the top of the frame the panel will stand proud of the frame when it's assembled, see Fig. 1a.

This double groove joint only requires one setup on the table saw, but it has to be made carefully. I added an auxiliary fence to support the panel (when standing on end). Then I set the rip fence one saw-blade's width away from the blade, see Fig. 1. This allows the pieces to interlock properly, see Fig. 1a. (For test pieces, I used ½"-thick stock so I could use them again for another setup later.)

When the fence and blade were set, I cut the grooves on the frame pieces, making sure their top faces were against the fence, see Fig. 2. Then I cut the grooves with the bottom face of the lid panel against the rip fence, see Fig. 3.

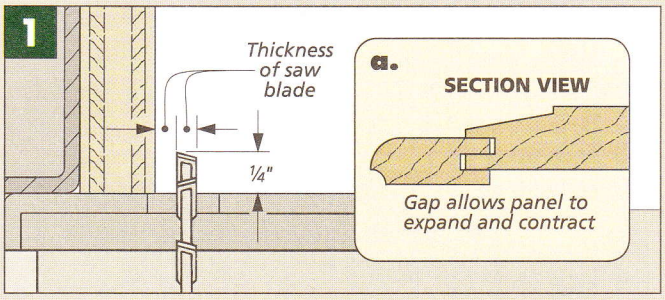

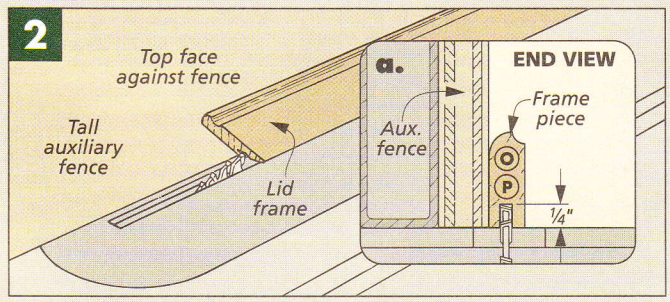

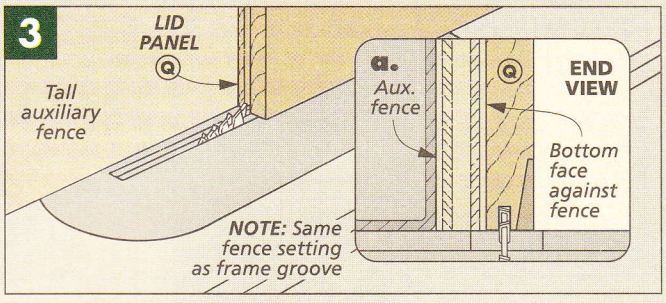

Finishing & Liner

Since the scroll work was finished earlier, you've gotten a "jump start" on the finishing (see page 28). To complete the process, I applied a coat of the same finish to the insides of the case, the lid, and the base. Then a couple more coats can be applied to the *entire* box. However, I didn't try to get finish *into* the tiny scroll sawn openings. Here, I used a folded, lint-free rag, carefully wiping it so as not to catch the points of the scroll work.

OPTIONAL LINER. After the finish had dried, I added an optional padded liner to the inside of the case and the tray — kind of like pillows for the jewelry to rest on, see photo above right.

The liner is a piece of cardboard and batting that's covered with fabric. (All purchased at a fabric store.) The cardboard is cut 1/16" short of the case opening in length and width. Then it's set on a piece of batting that's about 1/16" thick. Use the cardboard as a template to cut the batting.

For the fabric, I chose a piece of satin, cutting it 2" larger than the cardboard. And to make it easier to wrap around the cardboard, I trimmed the corners of the fabric. Simply lay it good face down with the cardboard on top and mark across the corners, leaving about 1/8", see Fig. 15a.

Now you're ready to put the liner together. Lay the fabric good face down and set the batting and cardboard on top. Then put strips of tape on the fabric and fold it over the cardboard. Try to pull the fabric evenly, or you may end up with ripples. And if there are little "ears" of fabric at the corners, you can either fold them under and tape or glue them, or set the liner in place and carefully tuck them down into the corners. W

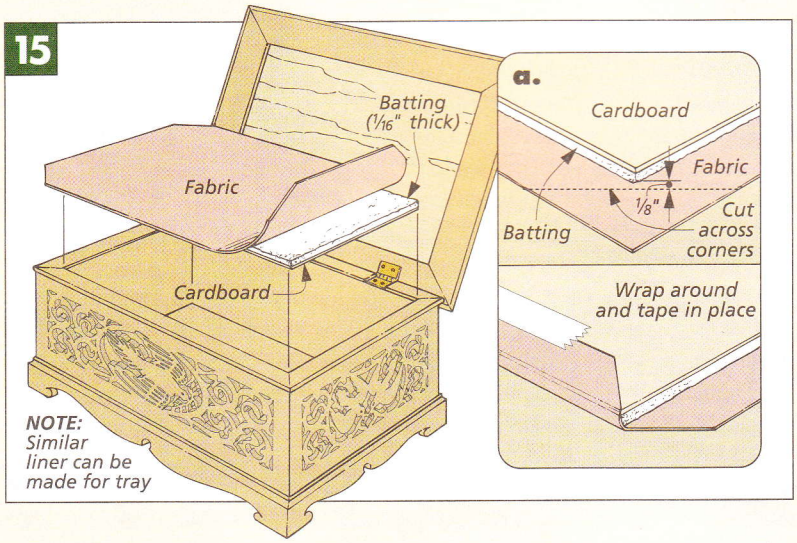

MATERIALS & SUPPLIES

A	Fr./Bk. Scroll Panels (2)	1/8 x 3 1/2 - 10
B	End Scroll Panels (2)	1/8 x 3 1/2 - 7
C	Fr./Bk. Panels (2)	3/8 x 3 1/2 - 10
D	End Panels (2)	3/8 x 3 1/2 - 7
E	Fr./Bk. Molding (4)	1/8 x 9/16 - 10 1/8
F	End Molding (4)	1/8 x 9/16 - 7 1/8
G	Base Fr./Bk (2)	1/2 x 1 1/8 - 10 1/2
H	Base Ends (2)	1/2 x 1 1/8 - 7 1/2
I	Bottom (1)	1/4 ply. - 6 3/4 x 9 3/4
J	Long Dividers (2)	1/4 x 1 3/4 - 9
K	Short Dividers (2)	1/4 x 1 1/4 - 6
L	Tray Fr./Back (2)	1/4 x 1 3/4 - 4 1/2
M	Tray Ends (2)	1/4 x 1 3/4 - 6
N	Tray Bottom (1)	1/4 ply. - 4 1/4 x 5 3/4
O	Lid Frame Fr./Bk. (2)	3/8 x 1 - 10 1/2
P	Lid Frame Ends (2)	3/8 x 1 - 7 1/2
Q	Lid Frame Panel (1)	1/2 x 5 7/8 - 8 7/8

• (2) 3/4" x 1" Brass Hinges w/Screws

CUTTING DIAGRAM

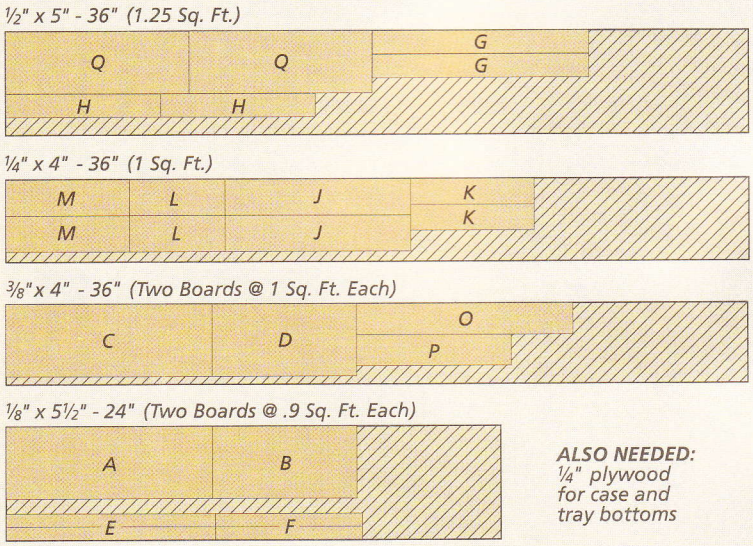

ALSO NEEDED: 1/4" plywood for case and tray bottoms

SOURCES

The hardware and supplies you need to build the projects in this issue are available from local stores or the mail order sources at right.

BOOKENDS

The only hardware the bookends on page 20 require are some small sheets of 16-gauge brass and a handful of woodscrews. (If you back up the scroll saw panels with brass, you'll also need some thinner 30-gauge pieces.)

BRASS. Finding small sheets of brass isn't too difficult. I found mine at a local hobby shop (one that has model train supplies).

COUNTERSINK BIT. When countersinking brass or wood, these days I use a special countersink bit, see photo and sources at right. (The one I have is manufactured by *Weldon.*)

This countersink bit has a single angled hole through its middle that forms the cutting edge. Since there's only one sharp edge that's doing the cutting (instead of a number of "flutes" that are merely scraping the brass), you end up with a smooth, consistent countersink.

There's another thing I like about these countersink bits (and why I like to use them in wood). They're sized just right. Unlike the usual bits, you can't drill a countersink that's way too large for the screw head.

SPRAY MOUNT ADHESIVE. Though you can use rubber cement when mounting scroll saw patterns, I like to use spray mount adhesive, because it's easier to remove. Spray mount is readily available at local art or craft stores.

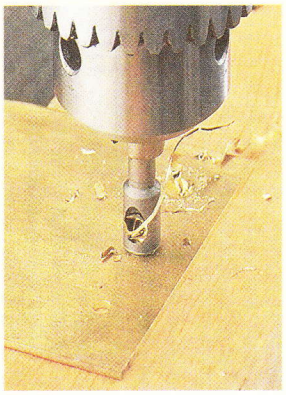

▲ *A special bit will cut clean and consistent countersinks in brass, aluminum, and wood.*

JEWELRY BOX

To build the jewelry box, the only hardware you need is a couple of brass hinges (3/4" x 1") with screws, see the mail order sources at right.

TV STAND

To build the TV stand, all you need is a 12"-dia. Lazy Susan and four rubber feet. If you can't find these locally, they're available from the sources at right.

DRESSING MIRROR

To build the dressing mirror on page 6, you'll need a mirror with an arched top. (Ours was 1/4"-thick with a 1"-wide bevel.) I purchased this from a glass shop *after* building the frame. (I even brought in the hardboard backer board that was made to fit the rabbet.)

In addition to the mirror, you'll need a pair of mirror swivel hinges, two 3/4"-dia. porcelain knobs, brass turnbuttons, 3/4"-dia. felt dots, and a handful of woodscrews. Similar swivel hinges and porcelain knobs are available from the mail order sources at right.

LIST RENTAL STATEMENT. On occasion, we allow companies whose products and services may be of interest to you to send advertising mail to our subscribers. We are careful to choose ethical companies that have information of genuine interest to our subscribers, and most of our subscribers appreciate receiving these materials. However, if you prefer to have your name deleted from the mailing list made available to other companies, please write to us at *Woodsmith*, 2200 Grand Avenue, Des Moines, IA 50312. W

NEW! Full-Sized Patterns on the Web

Full-sized scroll saw patterns for the bookends and jewelry box are currently available to download and print. Check them out at: ***www.woodsmith.com***

MAIL ORDER SOURCES

Similar project supplies and hardware may be ordered from the following companies:

Constantine's
800-223-8087
Dresser mirror swivel hinges and knobs, TV stand hardware, Jewelry box hinges

Lee Valley
800-871-8158
TV stand hardware, Countersink

Rockler Woodworking
800-279-4441
Dresser mirror hardware, TV stand hardware, Jewelry box hinges

Woodcraft
800-225-1153
Countersink, Jewelry box hinges

Woodworker's Supply
800-645-9292
TV stand hardware, Countersink, Jewelry box hinges

WOODSMITH PROJECT SUPPLIES

To order hardware kits from *Woodsmith Project Supplies*, please use our Toll Free order line, see below. It's open Monday through Friday, from 8 AM to 5 PM Central Time. Before calling, please have your VISA, MasterCard, or Discover Card ready.

If you would like to mail in your order, call the number below for more information concerning shipping charges as well as any applicable sales tax.

1-800-444-7527
When ordering, please use Key W126

Note: Prices subject to change after February 2000.

Woodsmith *on the web*

- Over 100 Woodworking Tips Online
- Project Plans You Can Download
- Catalog of Project Kits, Tools, Jigs & Plans
- Forums for Woodworking, Tools & Classifieds
- Links to Other Woodworking Sites
- *Woodsmith/ShopNotes* Back Issue Index
- Visit our other August Home Publishing Sites

www.woodsmith.com

New Online Customer Service
Click on Subscriber Services at
www.woodsmith.com
- Access your account status
- Find out if your payment has been received
- Change your mailing or e-mail address
- Tell us if you've missed an issue

Property of
Sask. Woodworkers
Guild Library

FINAL DETAILS

▲ ***Two-Drawer Dressing Mirror.*** *The graceful arched-top mirror, small raised panel drawers, and half-blind dovetails are some of the classic details that make this functional project one that will be treasured in any bedroom. For detailed plans, see page 6.*

▲ ***Tabletop TV Stand.*** *Solid wood construction and an inexpensive Lazy Susan swivel are all you need to build this small TV/VCR stand. You can find our complete step-by-step instructions on page 16.*

◄ ***Jewelry Box.*** *This delicate heirloom is a great chance to use your scroll saw. Plus, a lift-out tray and divided compartments make it easy to find all of your treasures. Detailed plans with two different scroll saw patterns begin on page 26.*

Bookends. ► *Scroll-sawn panels make these easy-to-build bookends an elegant addition to any bookshelf. And with three different patterns, you're sure to find one that suits your "frame" of mind. The article begins on page 20.*